

Office and Public Space

intuit
BY SOFTREND

Furniture Collection 2026

SEATING & WORKSATIONS


August
pg 28


August Workbay
pg 36


August Nook
pg 42


August Wall
pg 46


Ben
pg 50


Don
pg 54


Frankie
pg 58


Harles
pg 64


Hektor
pg 70


Hubert & Hubert Mini
pg 74


Ikoon
pg 78


Intro
pg 84


Kimi
pg 86


Lilja
pg 92


Loop, Duo & Twin
pg 98


Meeter Modular
pg 100


Meeter Gap
pg 108


Meeter Round
pg 114


Meeter Sofa & Armchair
pg 118


Meeter Workbay
pg 124


Node
pg 128


Sans
pg 136


Sofi
pg 146


Takt
pg 150


Wander
pg 154

PHONE POD


Intuit Booth
pg 158

TABLES


Aide
pg 162


Alfred
pg 166


Kuubik
pg 168


Kuubik Side Table
pg 172

SCREENS, SPACE DIVIDERS & WALL PANELS


Grow
pg 174


Hover
pg 178


Note
pg 184


Silent Note
pg 182


Oaas
pg 184


Sigmund
pg 192


Sprout
pg 194

CONTENTS

Intro

Environment matters **2**

From Tradition to Innovation: the Intuit story **14**

Intuit by Softrend and Sustainability **16**

Sound-absorbing furniture **24**

Collection

Seating & workstations

August **28**

August Workbay **36**

August Nook **42**

August Wall **46**

Ben **50**

Don **54**

Frankie **58**

Harles **64**

Hektor **70**

Hubert & Hubert Mini **74**

Ikoon **78**

Intro **84**

Kimi **86**

Lilja **92**

Loop, Duo & Twin **98**

Meeter Modular **100**

Meeter Gap **108**

Meeter Round **114**

Meeter Sofa & Armchair **118**

Meeter Workbay **124**

Node **128**

Sans **136**

Sofi **146**

Takt **150**

Wander **154**

Phone pod

Intuit Booth **158**

Tables

Aide **162**

Alfred **166**

Kuubik **168**

Kuubik Side Table **172**

Screens, space dividers & wall panels

Grow **174**

Hover **178**

Note **182**

Silent Note **184**

Oaas **186**

Sigmund **192**

Sprout **194**

Fabrics

Standard Fabric Collection **198**

ENVIRONMENT MATTERS

At Intuit by Softrend, we understand that environments matter. Whether it's in the office or public spaces like educational facilities, libraries, cafeterias or public waiting areas, our furniture designs are crafted not only to fill spaces but to transform them. We believe in creating settings that nurture creativity, foster collaboration, and enhance productivity, making every space intuitive and lively. Each of Intuit's furniture pieces is designed with the goal of making spaces more adaptable, functional, and appealing. At Intuit by Softrend, we're committed to redefining how furniture interacts with spaces and its users.


GOOD FOOD – GOOD MOOD

INTUITIVE FURNISHING FOR GETTING THINGS DONE









Our way of working has changed. It's the creative problem solving, agile collaboration, and the feeling of community we search for in the office. Intuit's designs have evolved to meet this shift.

We've taken the spirit of the breakout space and divided it into 4 distinctive work zones — each designed to meet a particular need to encourage creativity and connection.

Our 4 Zones use modular and multi-functional furniture solutions to make the most of every area of the office. Providing alternate spaces to choose where to work within the office drives a more effective workspace, a better work experience, and better individual performance. A win-win!

The world is moving fast — with Intuit, you make sure office space can keep up.











Welcome Zone



Social Zone



Collaboration Zone



Concentration Zone

INTUITIVE OFFICE









INSPIRING LEARNING SPACES

At Intuit, we understand that effective learning environments extend beyond the traditional classroom setup of desks and chairs. Our vision is to create versatile spaces that cater to every aspect of the educational journey — from quiet study areas equipped with screens to dynamic group workspaces and comfortable lounges for relaxation and social interaction.

Our range of school furniture is designed to enrich learning experiences across all educational stages, from kindergartens to universities. We prioritize well-being for users of all ages and sizes, ensuring our furniture combines timeless design with functionality. Built to last, our pieces boast durable structures and are easy to maintain, making them a smart investment for long-lasting learning environments.

TRANSFORMING THE WORKPLACE CAFÉ INTO A DYNAMIC HUB

At Intuit, we believe a contemporary workplace café does more than just serve food; it enriches the entire workplace experience. Far from being just a corporate eatery, it's a dynamic, multifunctional hub where employees can dine, meet, work, network, socialize, and reenergize. By activating underutilized spaces throughout the working day, it plays a crucial role in fostering employee productivityand well-being.













ELEVATING THE LIBRARY SPACE

In the heart of every library, from the quiet corners of reading nooks to the collaborative buzz of communal spaces, the right seating can transform the experience. Intuit's range of library seating furniture is designed to meet every need— whether it's for individual study, group projects, or leisurely reading.

At Intuit, we believe in the power of timeless design, durability, and ease of maintenance to create inviting, long-lasting reading and learning environments. Discover seating solutions that cater to the diverse requirements of modern libraries, ensuring every visitor finds their perfect spot.

ENHANCING TRANSIT SPACES INTO WELCOMING HUBS

The quality of waiting areas, whether in airports, hospital lobbies, conference centers, or large office buildings, significantly impacts user experience. Our approach to designing for these spaces centers on transforming mere transit areas into inviting hubs that offer comfort and function while waiting.

Inuit's public space collection is crafted to elevate waiting areas into more than just pass-through spaces; they become places where visitors can relax in comfort, catch up on work, or enjoy a peaceful moment away from the hustle and bustle. With Intuit's furniture, waiting becomes an experience in itself, characterized by style, comfort, and utility.


ON AIR







FROM TRADITION TO INNOVATION: THE INTUIT STORY

Rooted in Craftsmanship

Intuit by Softrend carries forward a legacy of over 25 years in the furniture industry, grounded in three generations of craftsmanship. Born from the established residential furniture brand Softrend, our journey began in a modest factory in Vääna, Estonia, where every sofa and bed is still handcrafted with precision. By managing every step of the production process, from meticulous quality control to extensive customization options, we uphold the highest standards. Our management system's adherence to ISO 9001:2015 and 14001:2015 reflects our commitment to consistent quality and environmental management.

Innovating for Tomorrow

With a foundation deeply rooted in Softrend's extensive experience, Intuit by Softrend was launched in 2016 to revolutionize the public space furniture sector. We infuse a spirit of curiosity and innovation into Softrend's traditional expertise, creating functional, sustainable, and stylish furniture.

Sustainability at the Core

At Intuit, sustainability isn't just a policy; it's a promise to our customers and the planet. We carefully select recyclable materials free from harmful chemicals, focusing on durable design to prolong the life of our products and lessen our environmental impact. Our design philosophy emphasizes product longevity, recyclability, and resource efficiency, ensuring that each piece not only serves its purpose but also contributes positively to the environment.

Quality and Value

Our mission is to offer high-quality, durable designer furniture at fair prices, ensuring that while our prices are competitive, the quality and craftsmanship remain uncompromised. We believe that a quality product not only lasts longer but also provides greater value over time.

Vision for the Future

Intuit is driven by a vision to enhance the daily lives of millions by creating the world's most inspiring and comfortable environments. Whether it's transforming offices into collaborative spaces or furnishing public areas like airports and hospitals, our goal is to make every environment a place where it's good to be. Our products are designed to nurture creativity, foster collaboration, and enhance productivity, ensuring that every space we touch is intuitive and vibrant.



THREE GENERATIONS
OF FURNITURE-
MAKING TRADITIONS
SINCE 1997







INTUIT BY SOFTREND AND SUSTAINABILITY

A growing number of informed consumers seek to make sustainable choices – but they can only do so if manufacturers make them possible. That's why Intuit by Softrend is steadfastly committed to sustainability, believing it's the only way to remain a responsible furniture manufacturer.

We recognize that the furniture industry has a significant environmental footprint. That's why we're taking action to reduce ours across the entire lifecycle of Softrend Group's products.

1 Reducing environmental impact by prioritizing chemical-free and recyclable materials.

2 Enhancing recyclability by considering the reuse of materials and components from the design phase.

3 Extending product lifespans and minimizing the need for replacement by designing durable, repairable products.

4 Lowering our ecological footprint through optimized storage, transport, resource efficiency, and weight reduction.





PRIORITIES OF SOFTREND'S SUSTAINABILITY STRATEGY

Softrend's vision of sustainability relies on three principles, originating from **United Nations' Sustainable Development Goals**.

Environment

- Climate change
- Circular economy

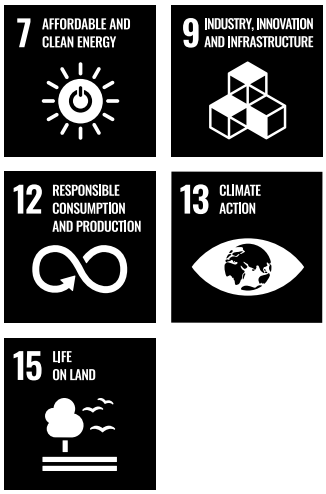

Social responsibility

- Consumer health and safety
- Labor policies for value chain employees
- Employee wellbeing

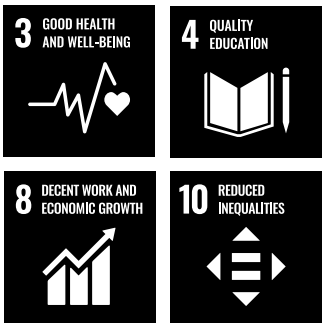

Management

- Transparency
- Responsible management







ALREADY PART OF OUR DAILY PRACTICES

Made to order

We prevent excess stock by producing only what is needed.

Circular product design

We design all new products for longevity. Easy to disassemble, they can be repaired, refreshed, and ultimately recycled.

Smart material choices

We encourage our customers to choose durable materials by offering them as standard. More and more are also recyclable.

Minimizing waste

Following ISO 1400:2015, we reduce waste, reuse what we can, and pass the rest to our partners.

CERTIFIED
ISO 9001
ISO 14001
BUREAU VERITAS



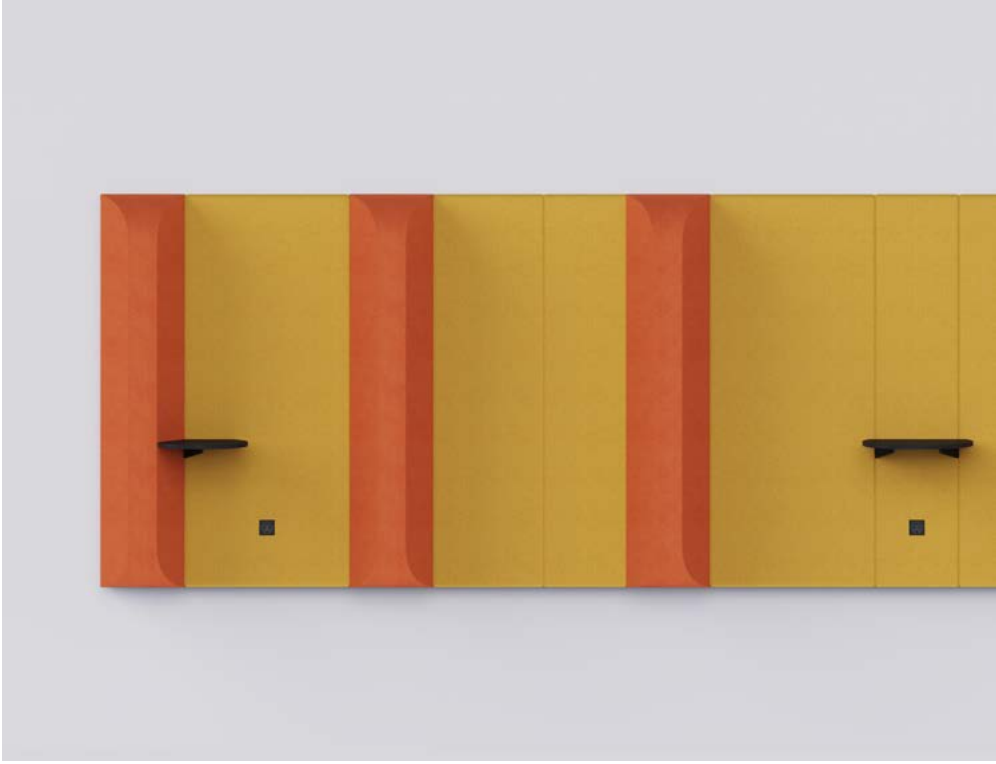

A great example of circular design is the Hover soft leaning wall – its top layers slide easily together and apart, making it simple to replace worn components.



WHERE ARE WE GOING?

More eco-labelled products

Building on the success of the Meeter series, which already carries the EU Ecolabel, we plan to certify at least ten more products or product lines by the end of 2026.

Improved recycling

We will increase the use of renewable and recycled materials in our products.

Circular economy products

All future products will follow circular design principles, and we will update most existing designs accordingly.

More sustainable packaging

We will prioritize recyclable transport packaging and reduce plastic use.

Enhanced governance & business ethics

We ensure a safe, supporting work environment while maintaining ethical and transparent business practices.





MEETER – INTUIT'S
FIRST EU ECOLABELLED
PRODUCT SERIES





EU ECOLABEL AND OUR PRODUCTS

The EU Ecolabel guarantees that a product is made in an environmentally and health-friendly way, has a long lifespan, and can be safely recycled. We are applying for Ecolabels for our products to help customers make more sustainable choices.

Environment

The raw wood, cork, bamboo, or rattan used in Ecolabelled products comes from sustainably managed forests.

Health

Ecolabelled furniture is produced without the use of hazardous chemicals, ensuring safety for everyone who comes into contact with it – both during production and use.

Warranty

Ecolabelled products come with a long manufacturer's guarantee, reflecting their high quality and exceptional durability.

Sustainability

Ecolabelled furniture is easy to dismantle, repair, and refresh – for example, by replacing the fabric and foam. This process further extends the product's lifespan.

Ecolabelled fabrics

Intuit offers a range of around 1,500 fabrics, over half of them carry the Ecolabel. These 724 fabrics, each with distinctive looks and versatile characteristics, come from various manufacturers and are divided into multiple price categories.

FSC certified wood

We already use 90% FSC-certified wood in the production of Intuit's products. This certification ensures that the wood is produced with equal regard for both the environment and economic viability.

EU Ecolabel
www.ecolabel.eu
EU Ecolabel: EE/049/001

FSC
www.fsc.org
FSC™C170945
Look out for our FSC-certified products

Camira Oceanic fabric range is crafted from 100% recycled polyester and plastic sourced from marine debris.







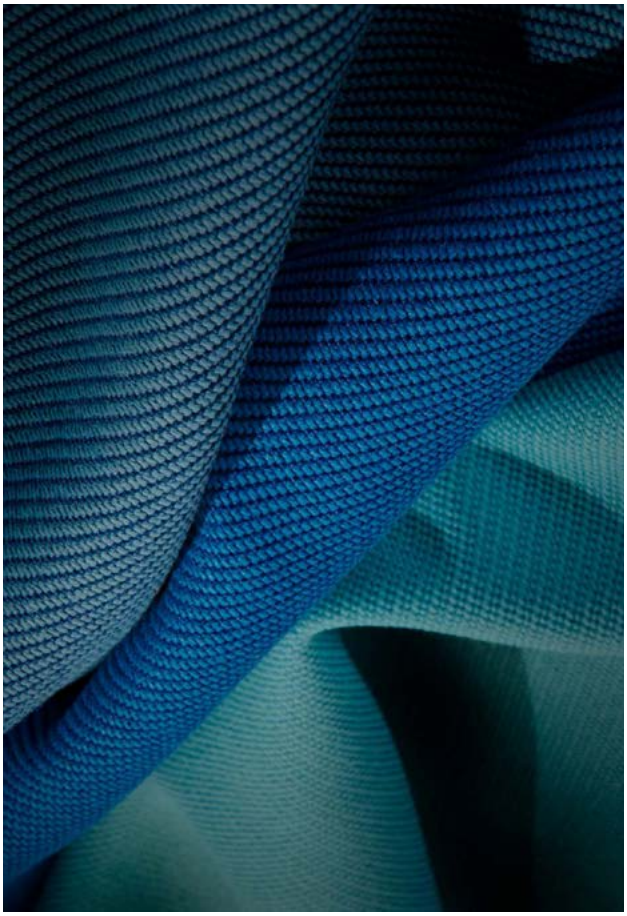

SOUND-ABSORBING FURNITURE

Public space and open offices often have problems with resonance, meaning that sounds reverberate for too long. Sound waves cannot move freely in a closed room and bounce off the structure of the room. Some of the sound is absorbed by surfaces, while some reflects from them.

Monitoring sound absorption and achieving the recommended reverberation duration is one of the principal tasks in the acoustic design of rooms. Acoustic absorption means that sound does not reflect off a material after reaching it. That is also the principle of designing furniture with acoustic properties: furniture has to absorb the sound that would otherwise reflect back and contribute to unwelcome noise.

Creating a more pleasant environment requires us to dampen all kinds of different sounds, such as fans, people's footsteps, conversations and phone calls.



Acoustic August

The entire August series is designed to improve office acoustics which makes it a perfect choice for an intuitive workplace. August product series gives you more absorption area in the room, e.g better sound and less reverberance. A less reverberant room gives you better speech quality and less noise in the work environment.

The August products are rated at the highest Class A for sound attenuation. This means that they offer noise reduction equivalent to covering additional square meters of a room with 100% sound-absorbing material. The specific amount of square meters covered depends on the surface area of the chosen August model.

THE AUGUST PRODUCTS ARE RATED AT THE HIGHEST CLASS A FOR SOUND ATTENUATION



Equivalent absorption area per object (m²Sab / object)

For example, the calculated sound absorption value for the August 2.5-Seat/H3 sofa model is 4.8m²/sab. This is comparable to completely covering an area of 4.8 m² with a material that absorbs 100% of sound. In practical terms, one August 2.5-Seat/H3 sofa provides the same noise reduction as about 12-13 sound absorber walls, each 50mm thick and covered with cloth or felt, measuring 600x600 mm.

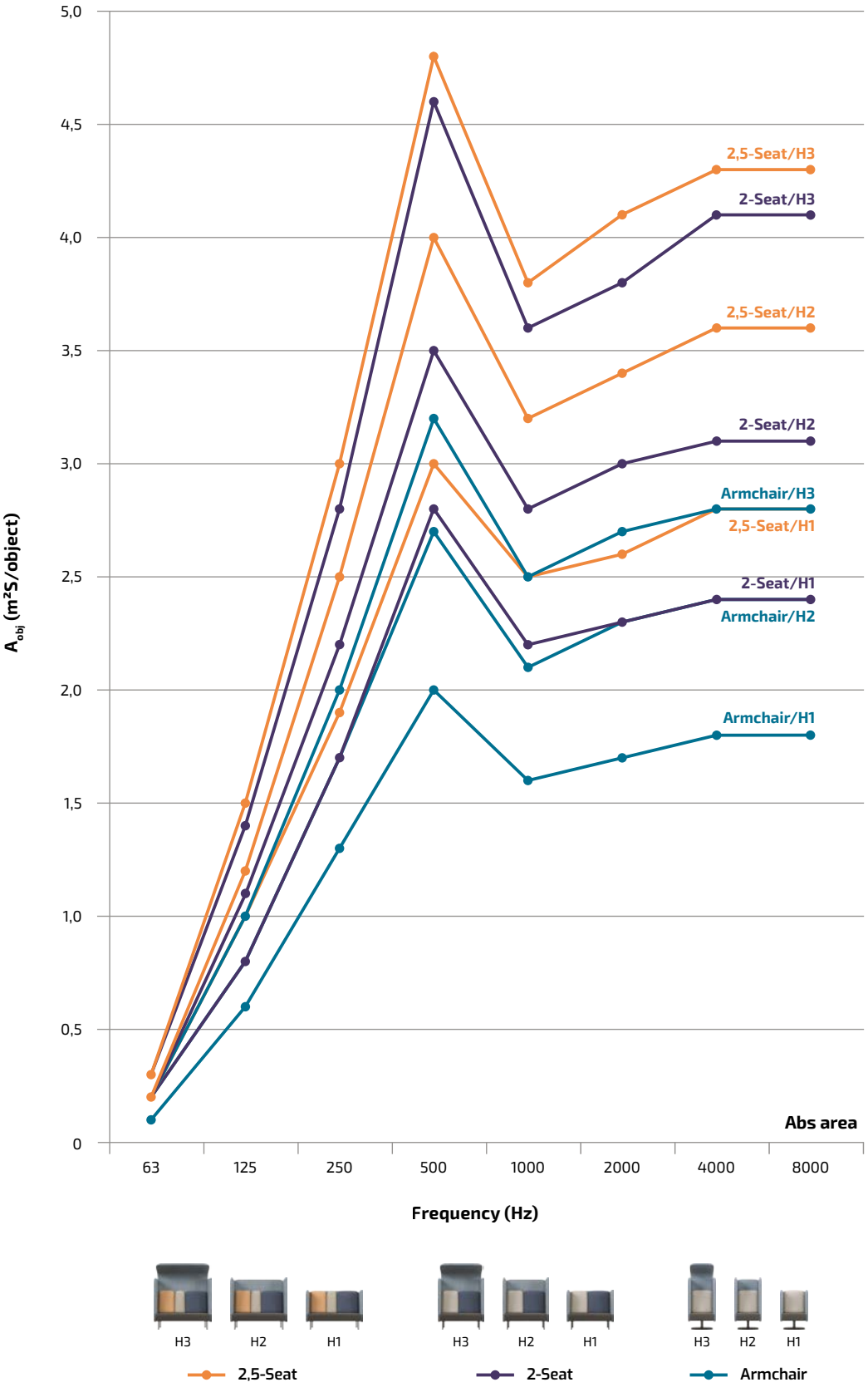

Calculated acoustic absorption values of August product range developed in cooperation with experts from Akukon

AKUKON SOUND – VISION – VIBRATION

Equivalent absorption area per object (m²Sab / object)

For example, the calculated sound absorption value for the August Workbay 2.5-Seat/H3 model is 10.7m²/sab. This is comparable to completely covering an area of 10.7 m² with a material that absorbs 100% of sound. In practical terms, one August Workbay 2.5-Seat/H3 provides the same noise reduction as about 29-30 sound absorber walls, each 50mm thick and covered with cloth or felt, measuring 600x600 mm.

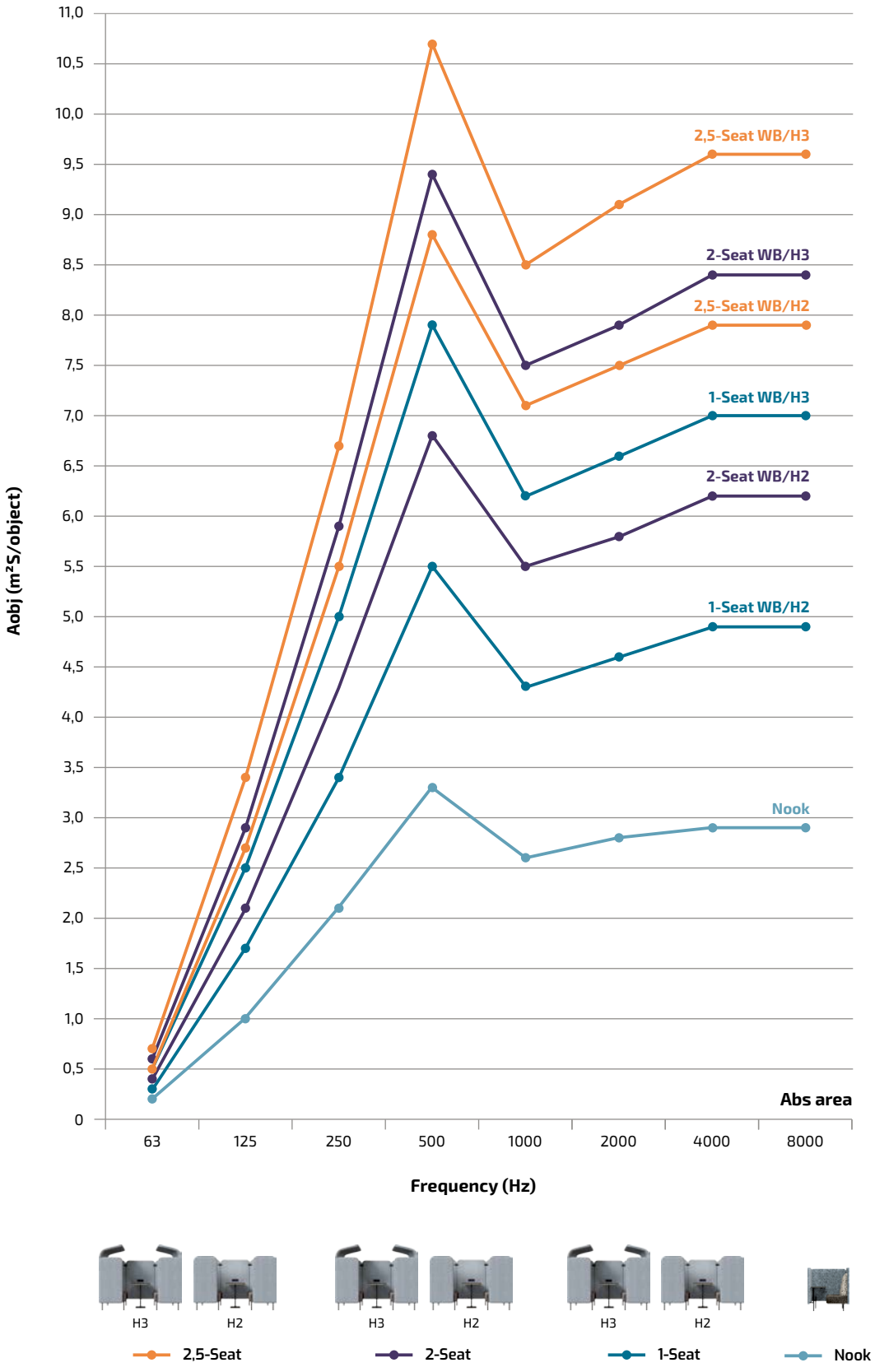

August

Available at pCon PLANNER

Sound-absorbing sofa and armchair

Design: Pent Talvet, Iseasi

The timeless and playful August series ranks among Intuit's TOP 3 popular products. We designed the August range to perfectly address the room acoustics issues which makes it a perfect choice for an intuitive workplace. Get away from the constant distractions, and quieten the noise when it's all too much.

With sound-absorbing walls, August gives you a private oasis within even the noisiest of surroundings, and the different height options make August versatile enough for conversations in your Social Zone, or focused individual work in your Concentration Zone.





Social Zone



Concentration Zone

- Encourage focus and seclusion
- Host private meetings
- Divide your space organically
- Cut down on background noise

PRODUCT INFORMATION

Versions
Available in 3 different heights and 3 different sizes

Acoustics
Sound absorption class A

Legs
Available with regular legs and 360° swivel base (only for armchair)

Accessories
Tables to add functionality to the seating area

Electrical outlet
Under the seating attached to the frame

Warranty
5 years

Sustainability
Embraces the principles of circular design

Test & Certification
- L1 European Standard strength, durability and safety certificate
- Acoustic absorption test - Class A

FSC
www.fsc.org
FSC™C170945
Look out for our FSC-certified products

STANDARD MATERIALS

Frame
Solid wood and plywood

Seat & backrest
Durable HR foam; fire retardant HR foam on request; fixed seat and back cushions

Legs
Solid oak / Powder-coated metal

Tables
Matt high-pressure laminate, or mass-colored wood fibreboard top with matt powder-coated metal legs

Fabric upholstery
The cover material is not removable
Sides and rear wall of H3 models can exclusively be covered with felt fabric only

Choose any fabric from **Intuit Standard Fabric Collection**

Additional information
As part of after-sales service we offer the change of cover fabric and all other components if needed

Vaisala office in Helsinki, Finland. Photo: Hannakaisa Pekkala



LEGS



Solid oak legs, stained and varnished; anti-slip soles



Matt powder-coated metal legs; anti-slip soles



360° swivel base, powder-coated metal (only for armchair)

Solid oak

Whitened	
Natural	
Wenge	
Black	

Powder-coated metal

Jet Black RAL 9005	

Other finishing options available on request.



Mustamäe State Gymnasium in Tallinn, Estonia. Photo: Märt Lillesiim

TABLES



Aide table



August side table

Aide tabletop

High-pressure laminate

Alpine White Egger W1100 PM	
Soft Black Egger U999 PM	
Stone Green Egger U665 PM	
Garnet Red Egger U399 PM	

Aide table legs

Powder-coated metal

Signal White RAL 9003	
Jet Black RAL 9005	
Tarpaulin Grey RAL 7010	
Black Red RAL 3007	

Other finishing options available on request.

August tabletop

High-pressure laminate, plywood edge

Black	

Mass-colored wood fibreboard

Grey	
Black	

August table frame

Powder-coated metal

Jet Black RAL 9005	

ELECTRICAL OUTLET

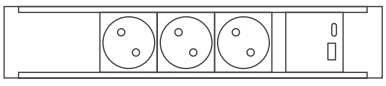

3x 220V + USB A & C

Other electrical outlet combinations available on request.

Bachmann Power Strip
Color: Black

Available options DK, EU, FR, UK



Armchair H1



Armchair H2



Armchair H3



Sofa 2-Seat / H1



Sofa 2-Seat / H2



Sofa 2-Seat / H3



Sofa 2,5-Seat / H1



Sofa 2,5-Seat / H2



Sofa 2,5-Seat / H3



Sofa 3-Seat / H1



Sofa 3-Seat / H2



Sofa 3-Seat / H3

DIMENSIONS

Armchair and sofa
Seat depth: 48 cm / Seat height: 45 cm

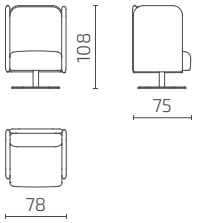

S101-S1H1 (J-39)

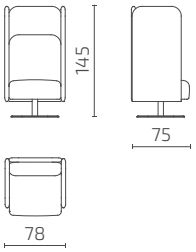

S101-S1H2 (J-39)

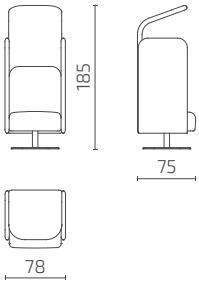

S101-S1H3 (J-39)

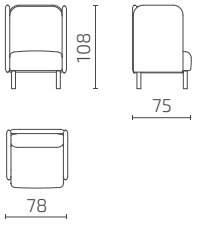

S101-S1H1

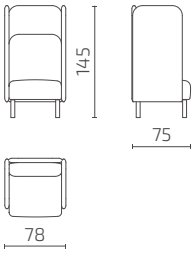

S101-S1H2

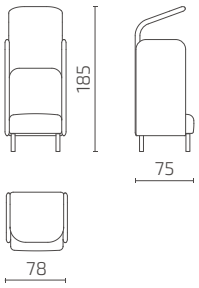

S101-S1H3

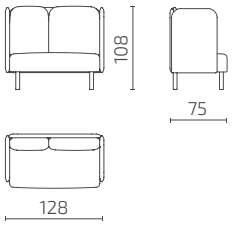

S101-S2H1

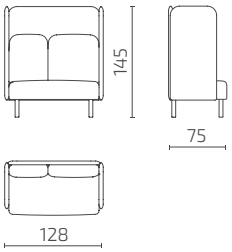

S101-S2H2

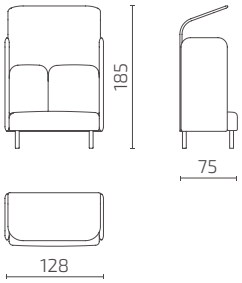

S101-S2H3

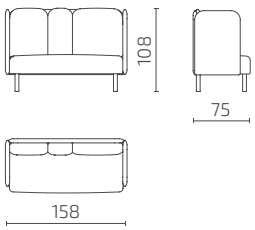

S101-S25H1

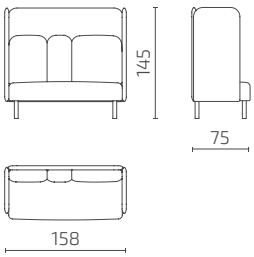

S101-S25H2

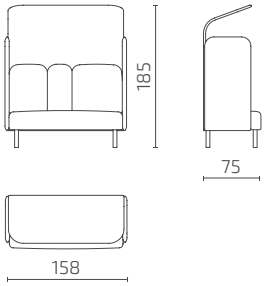

S101-S25H3

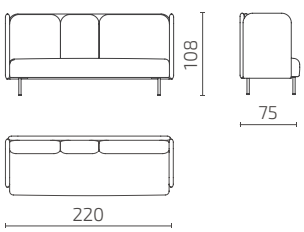

S101-S3H1

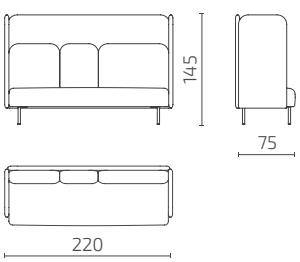

S101-S3H2

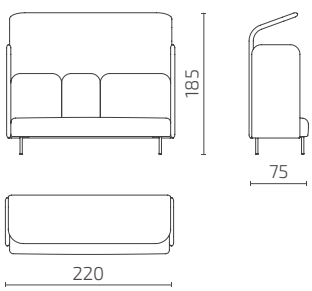

S101-S3H3

All dimensions provided in centimetres.

Tables

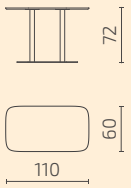

S128-T1M
AIDE table

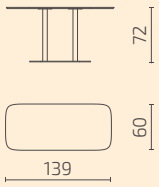

S128-T3M
AIDE table

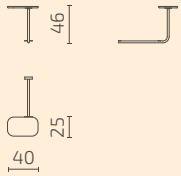

S101-T2
AUGUST table



Co-working space NUUUORK at Berlin Airport, Germany. Photo: Ariane Brille

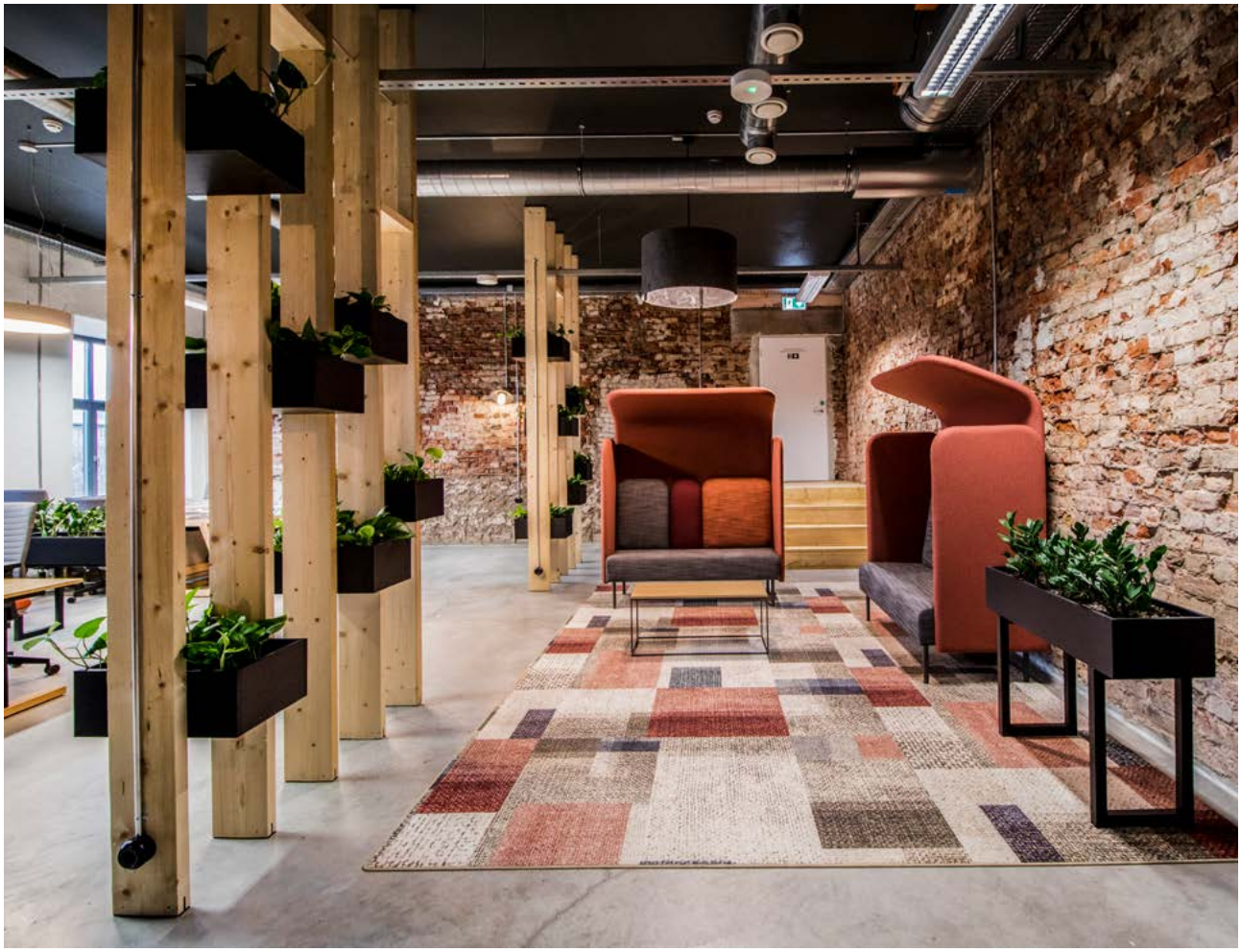

RebelRoam office in Tallinn, Estonia. Photo: Kristiina Vasar

August Workbay

Available at pCon PLANNER

Sound-absorbing workstation
Design: Pent Talvet, Iseasi

Looking for the perfect spot to have that important conversation? The August sofa set provides an easy solution for creating a workbay where you can go to get some privacy or have meetings. The August Workbay is an integral part of your Concentration Zone, providing an opportunity to step away from the noise, and find the focus you need.

The only thing it takes is to connect two August sofas or armchairs with a partition wall. Sound-absorbing qualities make it easy to carve out a space of peace and quiet within an open-plan office. Distraction-busting high sides with sound-absorbing qualities make it easy to carve out a space of peace and quiet within an open-plan surroundings.





Collaboration Zone



Concentration Zone

- Divide your space organically
- Cut down on background noise
- Hold your own private meeting
- Give the option of focus and seclusion

PRODUCT INFORMATION

Versions
Availabe in 2 different heights and 4 different sizes

Acoustics
Sound absorption class A

Accessories
Additional tables to add functionality to the seating area

Electrical outlet
Integrated in the PC and TV wall

Warranty
5 years

Sustainability
Embraces the principles of circular design

Test & Certification
- L1 European Standard strength, durability and safety certificate
- Acoustic absorption test - Class A

FSC
www.fsc.org
FSC™C170945
Look out for our FSC-certified products

STANDARD MATERIALS

Frame
Solid wood and plywood

Seat & backrest
Durable HR foam; fire retardant HR foam on request; fixed seat and back cushions

Wall fastenings
Powder-coated metal

Legs
Solid oak / Powder-coated metal

Tables
Matt high-pressure laminate top with matt powder-coated metal legs

Fabric upholstery
The cover material is not removable
Sides and rear wall of H3 models can exclusively be covered with felt fabric only

Choose any fabric from **Intuit Standard Fabric Collection**

Additional information
As part of after-sales service we offer the change of cover fabric and all other components if needed



LEGS



Solid oak legs, stained and varnished; anti-slip soles



Matt powder-coated metal legs; anti-slip soles

Solid oak

Whitened	
Natural	
Wenge	
Black	

Powder-coated metal

Jet Black RAL 9005	

Other finishing options available on request.

ELECTRICAL OUTLET

Integrated in the PC wall

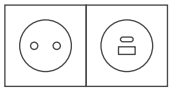

220V + USB A & C



Berker Integro Flow
Color: Anthracite Matt

Available options DK, EU, FR, UK

Integrated in the TV wall

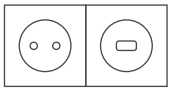

220V + HDMI

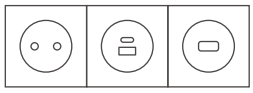

220V + USB A & C + HDMI



Berker Integro Flow
Color: Anthracite Matt

Available options DK, EU, FR, UK

Berker Integro Flow
Color: Anthracite Matt

Available options DK, EU, FR, UK

Other electrical outlet combinations available on request.

TABLES



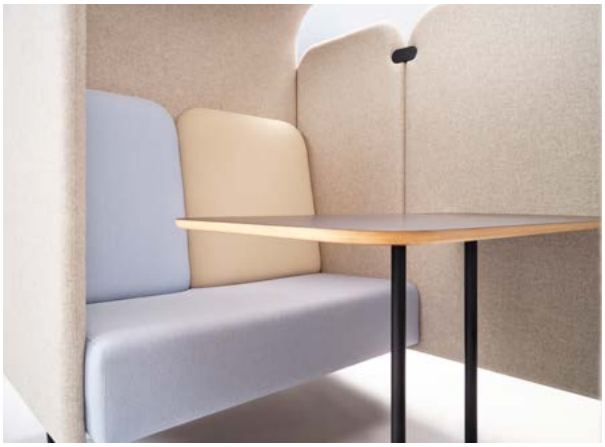

Aide cafeteria / work tables

Aide tabletop

High-pressure laminate

Alpine White Egger W1100 PM	
Soft Black Egger U999 PM	
Stone Green Egger U665 PM	
Garnet Red Egger U399 PM	

Aide table legs

Powder-coated metal

Signal White RAL 9003	
Jet Black RAL 9005	
Tarpaulin Grey RAL 7010	
Black Red RAL 3007	

Other finishing options available on request.

Payfit office in Paris, France





DIMENSIONS

Workbay

Seat depth: 48 cm / Seat height: 45 cm

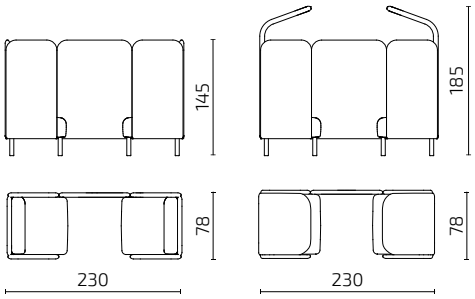

S101-WS1H2 **S101-WS1H3**

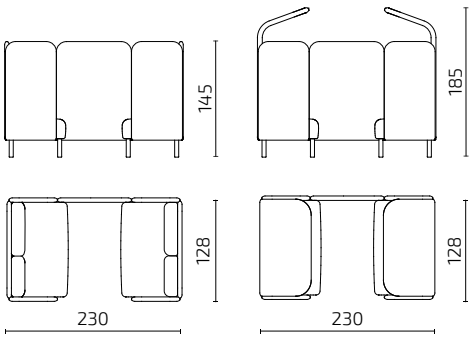

S101-WS2H2 **S101-WS2H3**

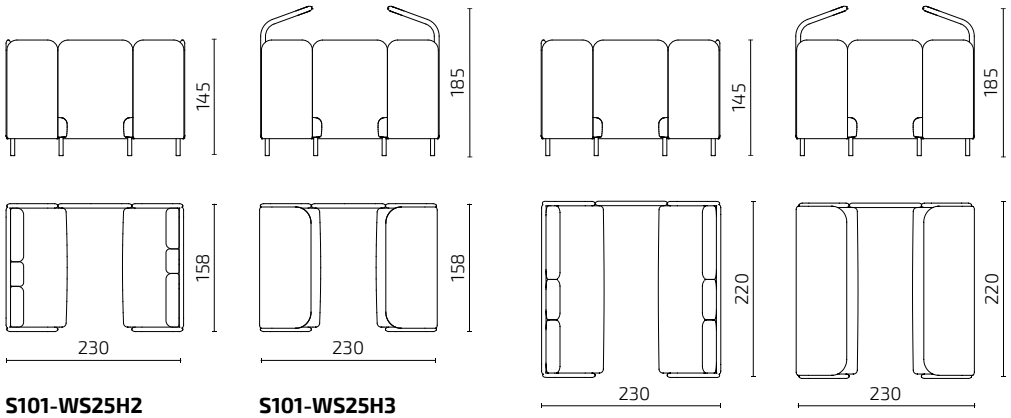

S101-WS25H2 **S101-WS25H3**

S101-WS3H2 **S101-WS3H3**

Workbay wall

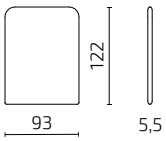

Regular wall



S101-ELPC

PC integrated electrical outlet

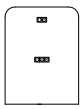

S101-ELTV

TV integrated electrical outlet

All dimensions provided in centimetres.

Tables

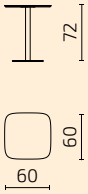

S128-T4M
AIDE table

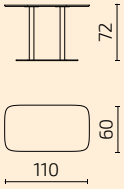

S128-T1M
AIDE table

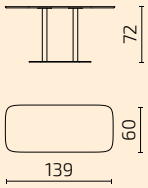

S128-T3M
AIDE table

August Nook

Available at pCon PLANNER

Sound-absorbing workstation
Design: Pent Talvet, Iseasi

How do you provide a welcoming space for your hybrid workers? You need the compact 3-in-1 August Nook, with its built-in laptop size table, comfortable seat, and sound-absorbing screens.

Inviting you into a secluded spot that encourages focus and deep work, the Nook is somewhere you can slip into for an hour, or hang out in all day. Everything you need, all in one streamlined space.





Concentration Zone

Cut down on background noise

Divide your space with ease

Encourage focus and seclusion

PRODUCT INFORMATION

Versions
Left- or right-handed seat position

Acoustics
Sound absorption class A

Electrical outlet
Integrated in the table top

Warranty
5 years

Sustainability
Embraces the principles of circular design

Test & Certification
- L1 European Standard strength, durability and safety certificate
- Acoustic absorption test - Class A

FSC
www.fsc.org
FSC™C170945
Look out for our FSC-certified products

STANDARD MATERIALS

Frame
Solid wood and plywood

Seat & backrest
Durable HR foam; fire retardant HR foam on request; fixed seat and back cushions

Legs
Powder-coated metal

Tables
Matt high-pressure laminate, or mass-colored wood fibreboard top with matt powder-coated metal frame

Fabric upholstery
The cover material is not removable
Choose any fabric from **Intuit Standard Fabric Collection**

Additional information
As part of after-sales service we offer the change of cover fabric and all other components if needed

Swedbank Eesti in Tallinn, Estonia. Photo: Helis Mahmastol



FINISHING OPTIONS

Legs

Powder-coated metal

Jet Black RAL 9005

Tabletop

High-pressure laminate, plywood edge

Black

Mass-colored wood fibreboard

Grey

Black

Table frame

Powder-coated metal

Jet Black RAL 9005

Other finishing options available on request.







ELECTRICAL OUTLET



220V

Powerdot Mini 50
Color: Black Matt

Available options CH, EU, FR



220V + USB A

Powerdot Compact 61
Color: Black Matt

Available options EU, FR, UK



220V + USB A & C

Powerdot 16
Color: Black Matt

Available options DK, EU, FR

Other electrical outlet combinations available on request.

DIMENSIONS

Seat depth: 48 cm / Seat height: 45 cm

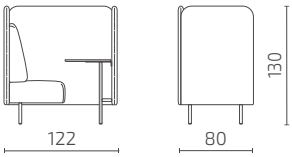

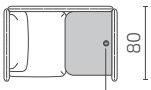

Integrated electrical outlet
in the table top

S101-NS1L

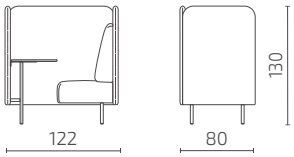

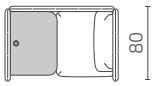

S101-NS1R

All dimensions provided in centimetres.

Swedbank Eesti in Tallinn, Estonia. Photo: Helis Mahmastol



August Wall

Available at pCon PLANNER

Sound-absorbing wall panelling and bench
Design: Pent Talvet, Iseasi

Soft August Wall panels with a separate pouffe add a playful touch to the August range. Sound-absorbing panels help improve the acoustic properties of open rooms. Use the August Wall and bench combination to create areas of circulation, where colleagues can have encounters that brighten their day.





Welcome Zone



Social Zone

Make your visitors feel at home

Make connections with colleagues

Cut down on background noise

PRODUCT INFORMATION

Versions
Available in 2 different modules

Warranty
5 years

Sustainability
Embraces the principles of circular design

Test & Certification
L1 European Standard strength, durability and safety certificate

FSC
www.fsc.org
FSC™C170945
Look out for our FSC-certified products

STANDARD MATERIALS

Frame
Solid wood and plywood

Seat & backrest
Durable HR foam; fire retardant HR foam on request

Legs
Solid oak / Powder-coated metal

Fabric upholstery
The cover material is not removable
Choose any fabric from **Intuit Standard Fabric Collection**

Additional information
As part of after-sales service we offer the change of cover fabric and all other components if needed



LEGS



Solid oak legs, stained and varnished;
anti-slip soles



Matt powder-coated metal legs;
anti-slip soles

Solid oak

Whitened	
Natural	
Wenge	
Black	

Powder-coated metal

Jet Black RAL 9005	

Other finishing options available on request.

PRODUCT CONSTRUCTION

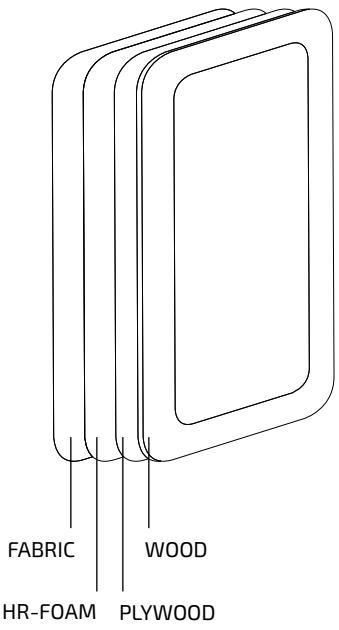

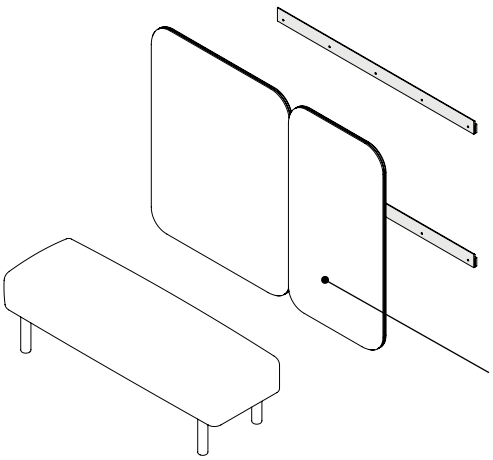

August Wall is **a separate panel**
to be installed on the wall

DIMENSIONS

August bench
Seat depth: 48 cm

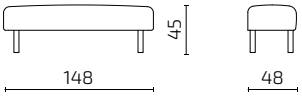

S101-F25

Wall panel

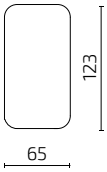

S101-WS

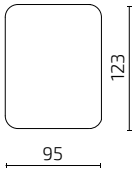

S101-WM

All dimensions provided in centimetres.



Ben

Available at pCon PLANNER

Soft office sofa

Design: Intuit design team

Sometimes the best business conversations happen away from the desk. Make sure your Social Zone sparks inspiration with the Ben Sofa. With versatile modules, you can create a piece of furniture that perfectly fits your space. And with Ben's springy softness your team will enjoy building connections over coffee.

Superior in design and comfort to the breakroom chairs you're used to, Ben shows your team how much you value their comfort and wellbeing. Put the finishing touches to your Social Zone with this inviting sofa.





Welcome Zone



Social Zone

Take a break

Make connections with colleagues

Make your visitors feel at home

Grab moments of rest

PRODUCT INFORMATION

Versions
Available in many different modules with and without armrests and 4 different pouffe sizes

Accessories
Additional pillows, two sizes available

Warranty
5 years

Sustainability
Based on principles of the circular economy

Certification

FSC
www.fsc.org
FSC™C170945
Look out for our FSC-certified products

STANDARD MATERIALS

Frame
Solid wood and plywood, zigzag springs

Seat and backrest
Durable HR foam; fire retardant HR foam on request

Pillows
Feather or fibre filling

Fabric upholstery
The cover fabric is not removable
Choose any fabric from **Intuit Standard Fabric Collection**

Additional information
As part of after-sales service we offer the change of cover fabric and all other components if needed

Total Jobs office in Portsmouth, UK. Photo: Soren Kristensen



SAMPLE COMBINATIONS

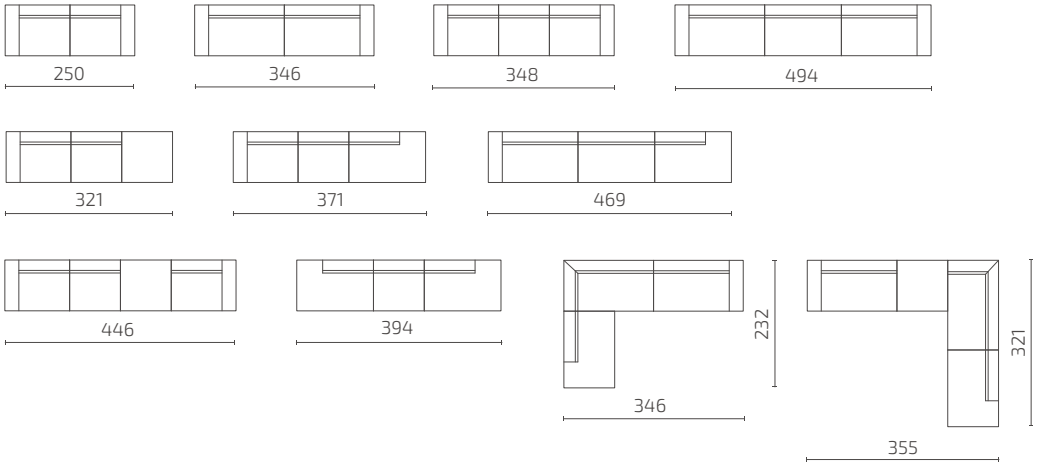



Separate module with armrest (left)



2-Seat with armrest (left) / Corner module (left) / Extended seat module (right)



2 x Footrest 4 / Extended seat module (right)



1.5-Seat with armrest (left) / 1.5-Seat with armrest (right)



Totaljobs office in Portsmouth, UK. Photo: Soren Kristensen

DIMENSIONS

Modules
Seat depth: 58 cm / Seat height: 37 cm

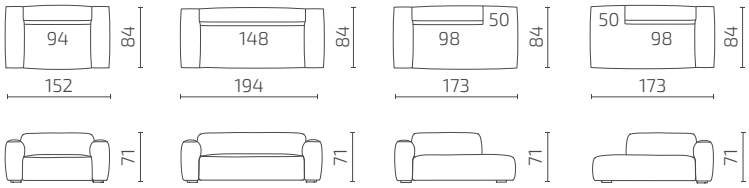

S120-S15 **S120-S2** **S120-1SDRKTL** **S120-1SDLKTR**

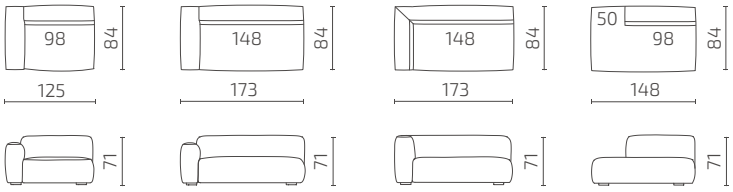

S120-15CL **S120-2CL** **S120-CL** **S120-1SDL**

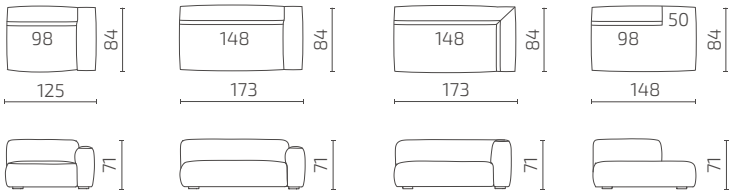

S120-15CR **S120-2CR** **S120-CR** **S120-1SDR**

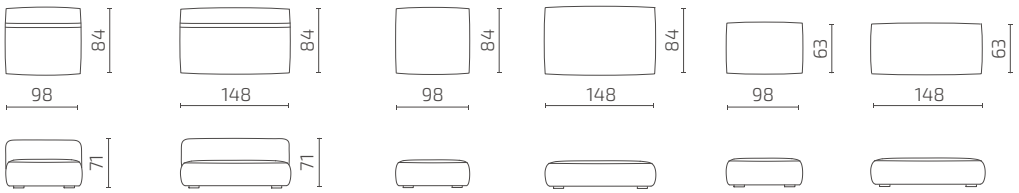

S120-15 **S120-2** **S120-F1** **S120-F2** **S120-F3** **S120-F4**

All dimensions provided in centimetres.

Pillows

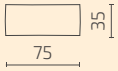

S120-P1

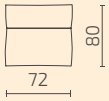

S120-P2

Don

Available at pCon PLANNER

Soft office sofa

Design: Intuit design team

While the lounge couch Ben serves as the focal point of the Social Zone, creating a comfortable space for colleagues to take a break from work, its larger counterpart, Don, elevates these breaks to a whole new level.

Don is as springy and as elegantly designed as Ben, but with a slightly deeper seating area, which adds a luxurious look and makes things more comfortable. Now everyone can get cosy and enjoy lying down, including four-legged members of the office.





Welcome Zone



Social Zone

Offer a spacious and comfortable seating area

Make guests feel at home

A great place to befriend colleagues

PRODUCT INFORMATION

Versions
Available in many different modules with and without armrests and 3 different pouffe sizes

Accessories
Additional pillows, two sizes available

Warranty
5 years

Sustainability
Based on principles of the circular economy

Certification

FSC
www.fsc.org
FSC™C170945
Look out for our FSC-certified products

STANDARD MATERIALS

Frame
Solid wood and plywood, zigzag springs

Seat and backrest
Durable HR foam; fire retardant HR foam on request

Pillows
Feather or fibre filling

Fabric upholstery
The cover fabric is not removable
Choose any fabric from **Intuit Standard Fabric Collection**

Additional information
As part of after-sales service we offer the change of cover fabric and all other components if needed

Lithuanian Railway office in Vilnius, Lithuania. Photo: Lukas Jusas



SAMPLE COMBINATIONS

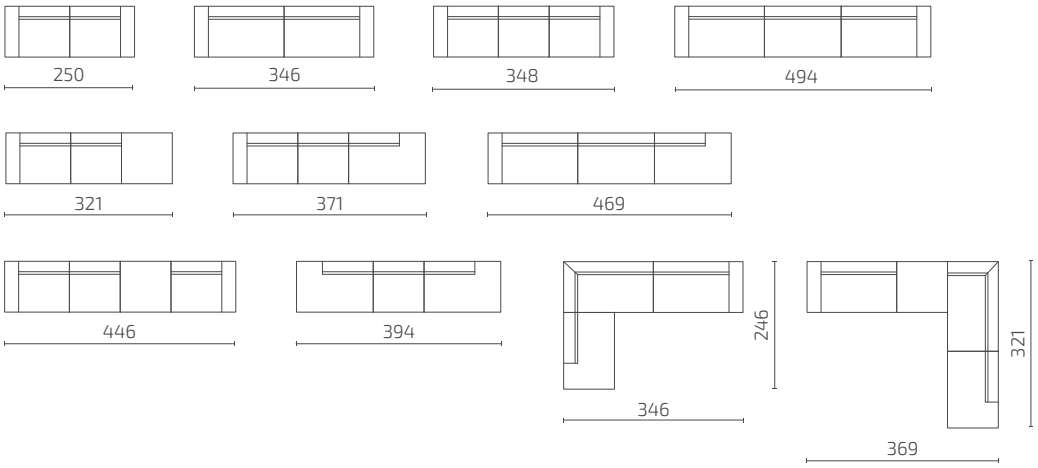



1.5-Seat with armrest (left) / 1.5-Seat



1.5-Seat with armrest (left) / 1.5-Seat / Footres



1.5-Seat with armrest (left) / Extended seat module (right)



Separate module with armrest (left)



1.5-Seat with armrest (left) / 1.5-Seat with armrest (right)



2-Seat with armrest (left) / 2-Seat with armrest (right)



1.5-Seat with armrest (left) / 1.5-Seat / 1.5-Seat with armrest (right)



2-Seat / Corner module (left)



Extended seat module (left) / Corner module (left) / Extended seat module (right)

DIMENSIONS

Modules
Seat depth: 72 cm / Seat height: 37 cm

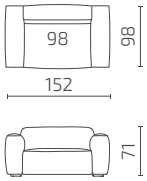

S53-S15

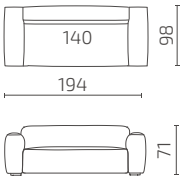

S53-S2

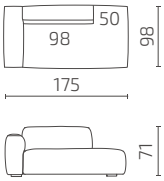

S53-1SDRKTL

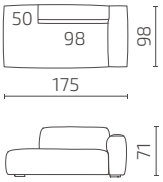

S53-1SDLKTR

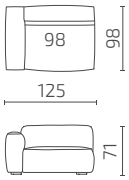

S53-15CL

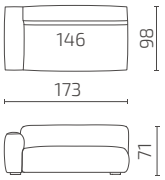

S53-2CL

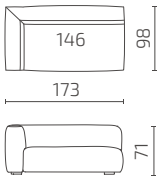

S53-CL

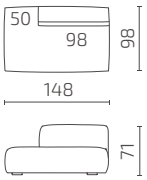

S53-1SDL

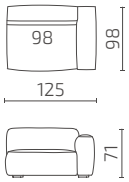

S53-15CR

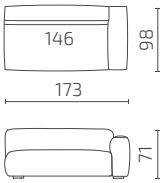

S53-2CR

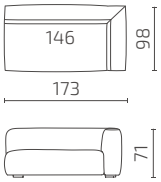

S53-CR

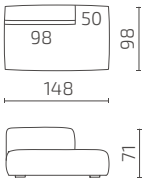

S53-1SDR

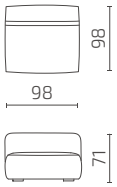

S53-15

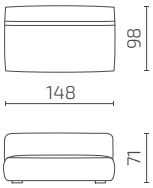

S53-2

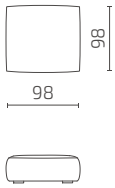

S53-F1

All dimensions provided in centimetres.

Pillows

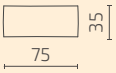

S53-P1

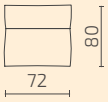

S53-P2

Frankie

Available at pCon PLANNER

Work sofa

Design: Argo Tamm

The slender and versatile Frankie embodies Intuit's agile ethos. With options of a sofa, armchair, and extended bench your imagination is the only limit. The set includes an attached table: a space for a computer, mug or magazine. Find your sweet spot with Frankie.







Collaboration Zone



Concentration Zone

Divide your space organically

Create focus and seclusion

Encourage rest

Host your own private meeting

PRODUCT INFORMATION

Versions
Available in many different dimensions

Modularity
Modules can be connected together

Accessories
Rotating attached side table to add functionality
Extra pillow

Electrical outlet
Under the seating attached to the frame

Warranty
5 years

Sustainability
Based on principles of the circular economy

Test & Certification
L1 European Standard strength, durability and safety certificate

FSC
www.fsc.org
FSC™ C170945
Look out for our FSC-certified products

STANDARD MATERIALS

Frame
Metal, solid wood and plywood

Seat & backrest
Durable HR foam; fire retardant HR foam on request

Legs
Powder-coated metal; anti-slip soles

Table
Matt high-pressure laminate, or mass-colored wood fibreboard top with matt powder-coated metal frame

Pillow
Feather filling

Fabric upholstery
The cover fabric is not removable
Choose any fabric from **Intuit Standard Fabric Collection**

Additional information
As part of after-sales service we offer the change of cover fabric and all other components if needed

Pipedrive office in Tallinn, Estonia



FINISHING OPTIONS

Legs

Powder-coated metal

Jet Black RAL 9005



Tabletop

High-pressure laminate, plywood edge

Black

Mass-colored wood fibreboard

Grey

Black

Table frame

Powder-coated metal

Jet Black RAL 9005

Other finishing options available on request.



Frankie side table

ELECTRICAL OUTLET

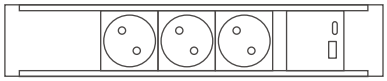

3x 220V + USB A & C

Bachmann Power Strip
Color: Black Matt

Available options DK, EU, FR, UK

Other electrical outlet combinations available on request.



SAMPLE COMBINATIONS



1-Seat with 2 side wall



1-Seat with 3 side wall



2-Seat with double opposite 2 side walls



2-Seat with double 2 side walls



2-Seat with double 2/3 side walls



2-Seat with double 3 side walls





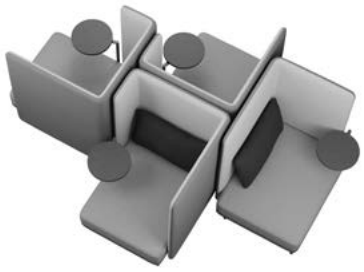



Net group office in Tallinn, Estonia. Photo: Tõnu Runnel

DIMENSIONS

Modules

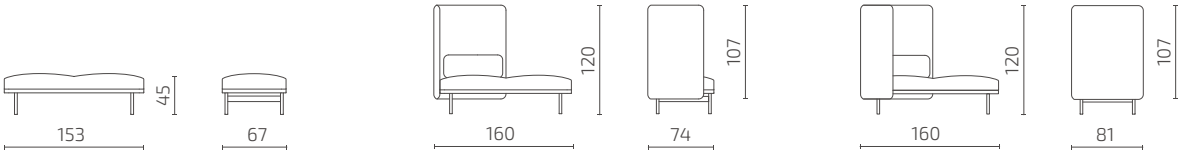

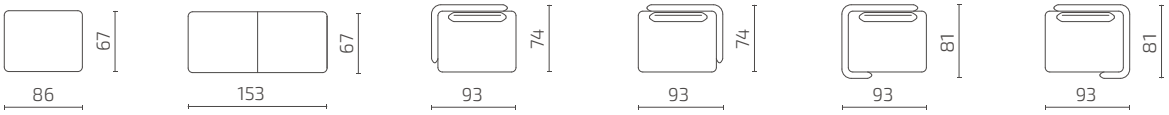

S107-F1 **S107-F2** **S107-2WLS1** **S107-2WRS1** **S107-3WLS1** **S107-3WRS1**

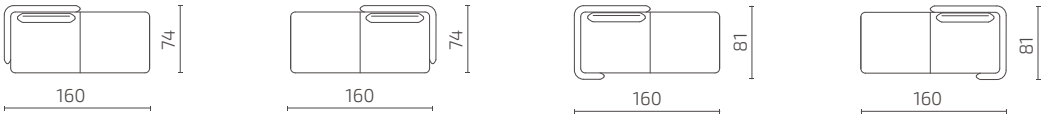

S107-2WLS2 **S107-2WRS2** **S107-3WLS2** **S107-3WRS2**

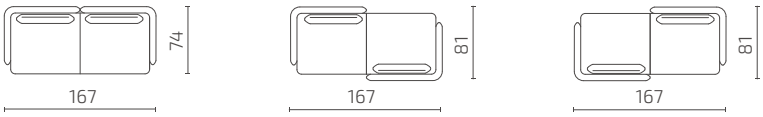

S107-2WL2WRS2 **S107-2WL2WLS2** **S107-2WR2WRS2**

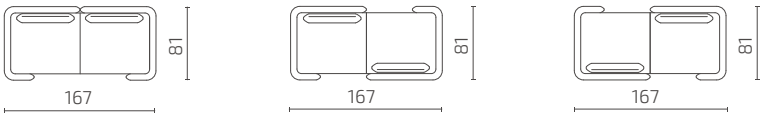

S107-3WL3WRS2 **S107-3WL3WLS2** **S107-3WR3WRS2**

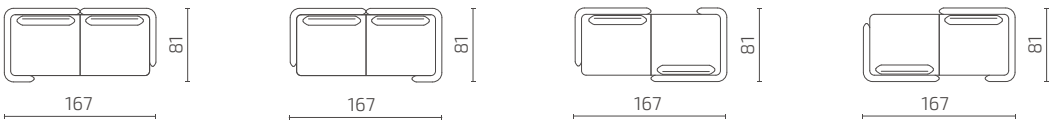

S107-3WL2WRS2 **S107-2WL3WRS2** **S107-2WL3WLS2** **S107-2WR3WRS2**

Table

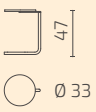

S107-T330

Pillow

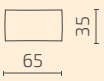

S107-DP

All dimensions provided in centimetres.

Harles

Soft office sofa

Design: Silver-Harles Haljandi

An office that feels like home creates a sense of warmth and belonging, where everyone feels welcomed and cared for. With its flowing form, Harles conveys this message in an effortless and chic way, with a touch of luxury.

The strength of the Harles sofa lies in its softness. Comfy seat cushions, filled with triple-layer foam, maintain their shape beautifully and make sitting a real pleasure. Designed with curves on all sides, Harles brings a sense of cosiness to any space, while its stylish high legs add an air or elegance. Opt for a seat module with a striking diagonal shape, and the character of Harles truly shines.





Welcome Zone



Social Zone



Collaboration Zone



Concentration Zone

Make waiting more comfortable

Feel homely and cosy

A nice place to chat

PRODUCT INFORMATION

Versions
Available in many different sizes

Warranty
5 years

Sustainability
Based on principles of the circular economy

Certification

FSC
www.fsc.org
FSC® C170945
Look out for our FSC-certified products

STANDARD MATERIALS

Frame
Solid wood and plywood, zigzag springs

Seat and backrest
Durable HR foam; fire retardant HR foam on request

Legs
Solid oak / Powder-coated metal

Fabric upholstery
The cover fabric is removable
Choose any fabric from Intuit **Standard Fabric Collection**

Additional information
As part of after-sales service we offer the change of cover fabric and all other components if needed



LEGS



Solid oak legs, stained and varnished;
anti-slip soles



Matt powder-coated metal legs;
anti-slip soles

Solid oak

Whitened	
Natural	
Wenge	
Black	

Powder-coated metal

Jet Black RAL 9005	

Other finishing options available on request.













Loveseat 1.5-Seat



3-Seat



3-Seat with corner module (right)



1.5-Seat with corner module (right)



1.5-Seat with small chaise longue (right)



1.5-Seat with extended chaise longue (right)



3-Seat with small chaise longue (right)



3-Seat with extended chaise longue (right)

DIMENSIONS

Sofa height: 93 cm / Seat depth: 65 cm / Seat height: 43 cm

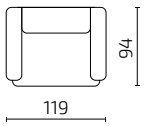

S72-S15

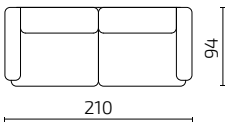

S72-S3

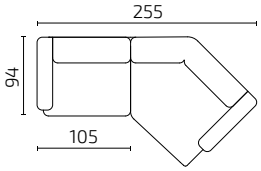

S72-15CLCSR

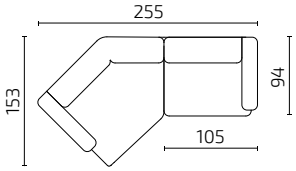

S72-CSL15CR

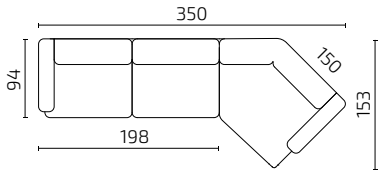

S72-3CLCSR

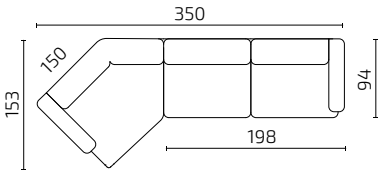

S72-CSL3CR

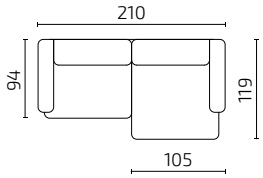

S72-15CL1DSR

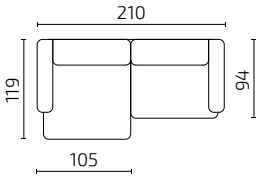

S72-1DSL15CR

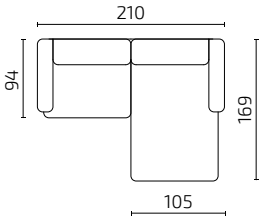

S72-15CL1DMR

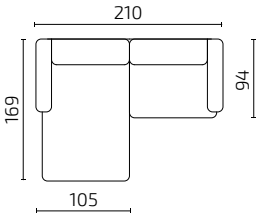

S72-1DML15CR

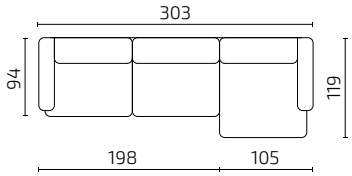

S72-3CL1DSR

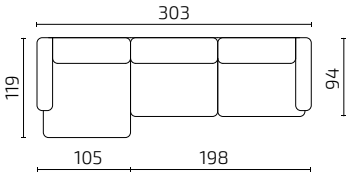

S72-1DSL3CR

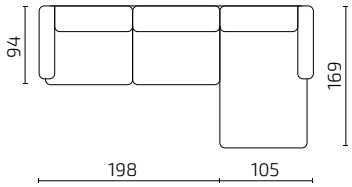

S72-3CL1DMR

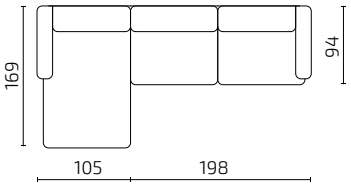

S72-1DML3CR

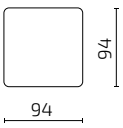

S72-F1

All dimensions provided in centimetres.

Hektor

Playful modular seating system

Design: Lauri Visnapuu

Designed for dynamic public and shared spaces, Hektor is a modular seating system built around soft, hexagonal forms that invite movement, interaction and flexible use. The playful geometry allows organic, non-linear configurations that work equally well as flowing seating landscapes or as individual standalone seats.

Available in three module heights — from low poufs to higher-backed elements — Hektor enables zoning, visual variation and optional privacy within open environments. Its generously upholstered, soft construction makes it comfortable for extended waiting, informal meetings or relaxed social moments.





Welcome Zone



Social Zone

Support comfort and interaction

Zone space with soft forms

Create organic seating layouts

PRODUCT INFORMATION

Versions
Available in 3 heights

Modularity
Modules can be connected together

Warranty
5 years

Sustainability
Based on principles of the circular economy

Certification

FSC
www.fsc.org
FSC™C170945
Look out for our FSC-certified products

STANDARD MATERIALS

Frame
Plywood

Seat and backrest
Durable HR foam; fire retardant HR foam on request

Fabric upholstery
The cover fabric is removable
Choose any fabric from Intuit **Standard Fabric Collection**

Additional information
As part of after-sales service we offer the change of cover fabric and all other components if needed



Ideal for airports, cultural venues, educational institutions and office lobbies, Hektor **brings structure and warmth** to high-traffic areas while offering architects freedom to shape space intuitively.



DIMENSIONS

Seat depth: 51 cm

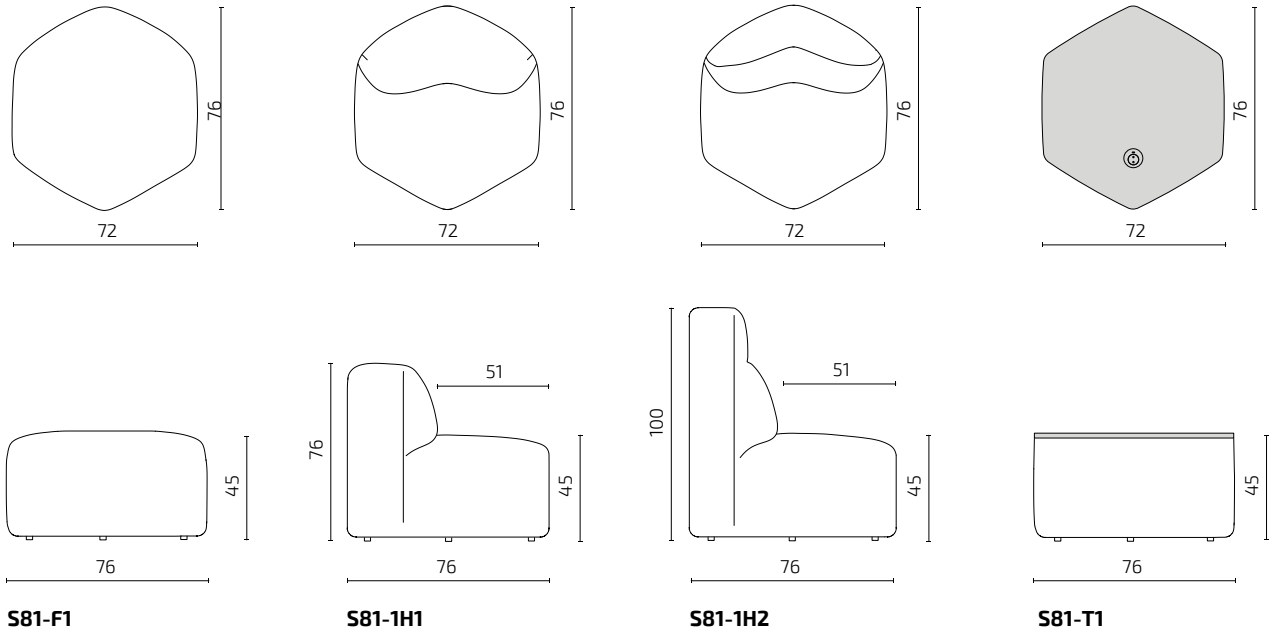

S81-F1 **S81-1H1** **S81-1H2** **S81-T1**

All dimensions provided in centimetres.









Hubert & Hubert Mini

Available at pCon PLANNER

High and low chair for meeting tables
Design: Iseasi

A chair that lets you brainstorm in style. The sleek frame and raised seat of the Hubert help to support ergonomic posture effortlessly, while the 360° swivel base lets you rotate and rock while ideating – great for productive and dynamic team meetings.

Simple to maneuver, these chairs help you create a welcoming and agile collaboration space at a moment's notice.



Collaboration Zone

Bring heads together at a moment's notice

Encourage active problem-solving

Make your office flexible

PRODUCT INFORMATION

Versions
Available in bar stool and regular seat height

Rocking base
Available with a rocking base and 360° rotating & tilting base

Warranty
5 years

Sustainability
Based on principles of the circular economy

Certification

FSC
www.fsc.org
FSC™C170945
Look out for our FSC-certified products

STANDARD MATERIALS

Frame
Plywood

Seat & backrest
Durable HR foam; fire retardant HR foam on request

Legs
Rocking base: oak
360° rotating & tilting base: plastic POM, black

Fabric upholstery
The cover fabric is removable
Choose any fabric from **Intuit Standard Fabric Collection**

Additional information
As part of after-sales service we offer the change of cover fabric and all other components if needed

SK ID Solutions office in Tallinn, Estonia. Photo: Märt Lillesiim







Ev. Hochschule in Freiburg, Germany

The chic design also comes in miniature. **Hubert Mini** has all the benefits of ergonomic design, manoeuvrability, and style, whilst being just the right size for regular meeting tables.





DIMENSIONS

Rocking base

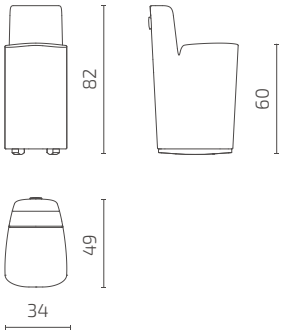

S109-FL1

360° rotating & tilting base

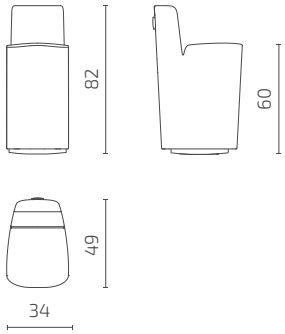

S109-FL2

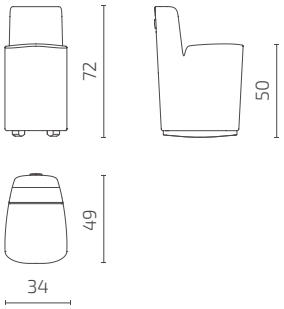

S109-MFL1

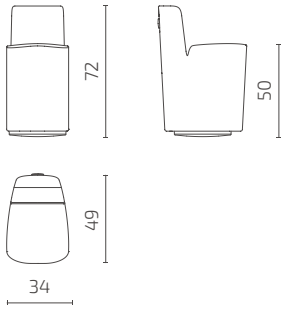

S109-MFL2

Seat depth: 36 cm

All dimensions provided in centimetres.



Ikoon

Compact privacy sofa system

Design: Argo Tamm

Designed for spaces where comfort, privacy and adaptability must coexist within a limited footprint, Ikoon is a compact sofa system that delivers focused seating without overwhelming the room. Its clean geometry and reduced dimensions make it easy to integrate into a wide range of interiors, while softly enclosing sides create a calm, personal seating experience.

Available in two heights, Ikoon supports different levels of interaction — from open, approachable seating to more enclosed use with enhanced visual and acoustic privacy. Integrated side tables provide a convenient surface for laptops or personal items, while optional power outlets — including an optional battery bank solution — enable power access without fixed connections, supporting mobile and laptop use and longer stays. With its compact form and optional castors, Ikoon can be easily repositioned as spaces and activities change.





Welcome Zone



Social Zone



Collaboration Zone



Concentration Zone

Reconfigure spaces with ease

Encourage focus and comfort

Create mobile privacy zones

PRODUCT INFORMATION

Versions
Available in 2 heights and 3 sizes

Legs
Plastic legs / Rotating castors

Accessories
Optional rotating side tables

Electrical outlet
Optional integrated electrical outlet

Cordless power bank
Optional integrated cordless power bank

Warranty
5 years

Certification

FSC
www.fsc.org
FSC™C170945
Look out for our
FSC-certified products

STANDARD MATERIALS

Frame
Plywood

Seat & backrest
Durable HR foam; fire retardant HR foam on request

Side-tables
Matt high-pressure laminate with powder-coated metal frame

Fabric upholstery
The cover material is not removable
Choose any fabric from **Intuit Standard Fabric Collection**

Additional information
As part of after-sales service we offer the change of cover fabric and all other components if needed



TABLES



Table T1



Table T2

Tabletop

High-pressure laminate

Natural oak

Table frame

Powder-coated metal

Jet Black RAL 9005

Other finishing options available on request.

ELECTRICAL OUTLET



220V + USB A

Powerdot Compact 61
Color: Black Matt

Available options EU, FR, UK



220V + USB A & C

Powerdot 16
Color: Black Matt

Available options DK, EU, FR

Other electrical outlet combinations available on request.

CORDLESS POWER BANK

QIKPAC
Lithium-ion battery, 240 Wh
Color: Black Matt





Ideal for offices, lobbies, lounges, larger meeting rooms and multi-use venues, Ikoon is designed to support spaces that need to transform quickly. **Rather than dictating layout, it follows the rhythm of daily activity** — shifting effortlessly between waitwing, informal meetings and focused individual use. Ikoon performs equally well in transport hubs, educational settings and shared public interiors where adaptability and privacy are essential.



Armchair H1



Armchair H2



Sofa 2-Seat / H1



Sofa 2-Seat / H2



Sofa 3-Seat / H1



Sofa 3-Seat / H2

DIMENSIONS

Armchair and sofa
Seat depth: 54 cm / Seat height: 45 cm

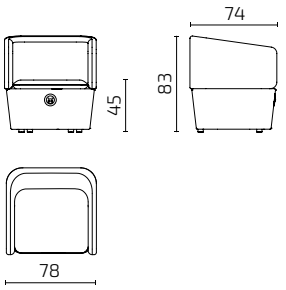

S82-S1H1

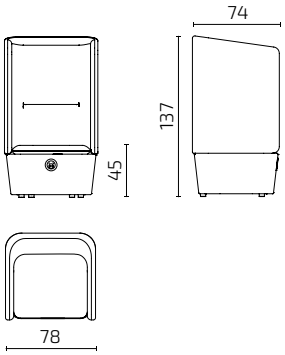

S82-S1H2

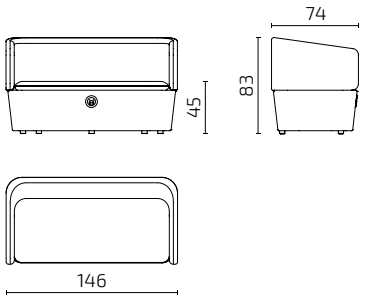

S82-S2H1

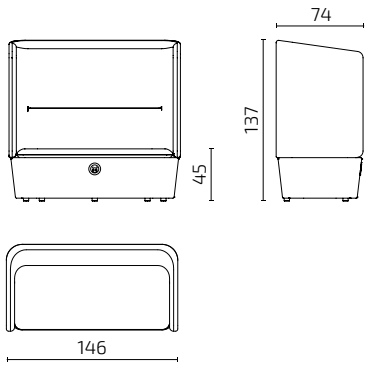

S82-S2H2

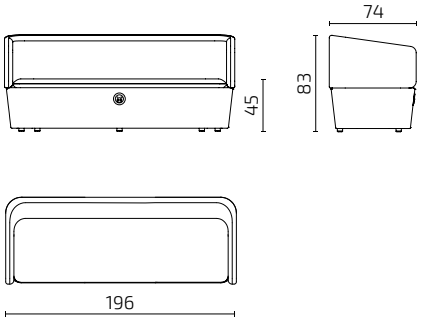

S82-S3H1

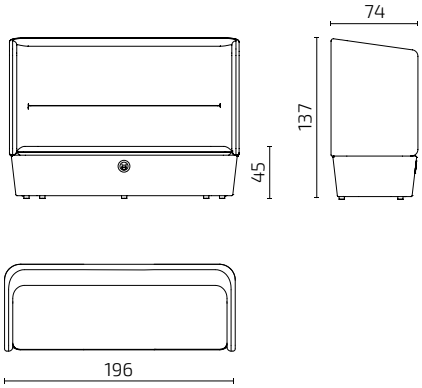

S82-S3H2

All dimensions provided in centimetres.

Tables

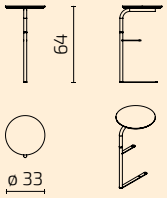

S82-T1

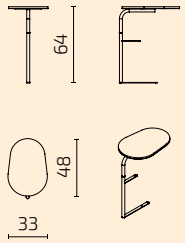

S82-T2

Intro

Lounge chair
Design: Argo Tamm

Not every office can cater for sprawling sofas and ping pong tables. But don't despair! If you're looking to create a flexible area for building community and encouraging relaxation, then we have what you need.

Compact, minimalist, oh so comfortable, Intro is easy to sink into with a cup of steaming coffee. And with its streamlined proportions you have an elegant solution to your space constraints.





Welcome Zone



Social Zone

Make your visitors feel welcome

Take a welcome break from your desk

Make connections with colleagues

PRODUCT INFORMATION

Leg
360° swivel base: metal leg and wood base

Warranty
5 years

Sustainability
Based on principles of the circular economy

Certification

FSC
www.fsc.org
FSC™C170945
Look out for our FSC-certified products

STANDARD MATERIALS

Frame
Metal

Leg
Powder-coated metal leg and wood base

Seat & backrest
High resiliency moulded PU foam

Fabric upholstery
The cover fabric is not removable
Choose any fabric from **Intuit Standard Fabric Collection**

Additional information
As part of after-sales service we offer the change of cover fabric and all other components if needed

FINISHING OPTIONS

Leg

Solid oak

Natural
Wenge
Black

Powder-coated metal

Jet Black RAL 9005
Stone Grey RAL 7030
Traffic White RAL 9016

Other finishing options available on request.

DIMENSIONS

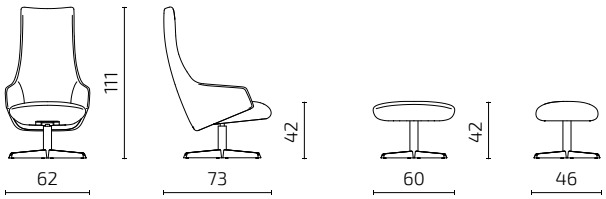

S64-S1 **S64-F1**

All dimensions provided in centimetres.



Kimi

Japandi-inspired, environmentally conscious sofa

Design: Argo Tamm

Inspired by Japandi style, Kimi brings balance, calm and conscious simplicity into the workplace. Its solid wood frame has a restrained, architectural presence, while adding warmth and natural character to the interior.

Thanks to its modular structure, Kimi can be configured into sofa compositions that suit a variety of spaces — from reception areas and lounges to quieter meeting and conversation zones. A practical movable armrest/table is available as an accessory: one side functions as a comfortable support to lean against, while the other provides a solid surface for a coffee cup, laptop or notebook. Decorative cushions can also be added to enhance back support and overall comfort.





Welcome Zone



Social Zone

- Help create a balanced, low-stress environment
- Offer comfortable seating for relaxed conversations
- Support sustainable and responsible interior design

PRODUCT INFORMATION

Versions
Available in many different sizes

Modularity
Modules can be connected together

Accessories
Movable armrest / side table: double-sided, one side functions as a tabletop, the other as a padded armrest
Decorative cushion: adds extra back comfort.

Warranty
5 years

Sustainability
Designed according to circular economy principles.
All sofa components are easily replaceable, supporting long product life and responsible use

Certification

FSC
www.fsc.org
FSC™C170945
Look out for our FSC-certified products

STANDARD MATERIALS

Leg grame
Solid ash wood with long lamella profile
Finishes: natural or oak stain (matte lacquer)

Seat and back cushions
Back cushion: plywood frame with HS foam;
Seat cushion: HR foam with bent plywood slats underneath

Fabric upholstery
The covers are fully removable. 100% cotton base fabric
Choose any fabric from Intuit **Standard Fabric Collection**

Additional information
As part of our after-sales service, we offer replacement of upholstery and all other components when needed



FINISHING OPTIONS



Leg frame

Solid ash

Natural	
Oak stain	

Other finishing options available on request.



One of Intuit's most sustainable sofa solutions



Kimi has been designed in line with **circular economy principles**. Instead of a traditional boxed construction, its frame is based on monomaterials, making the sofa fully recyclable. All upholstery covers are completely removable, allowing for easy maintenance and replacement — extending the product's lifespan and supporting long-term, responsible use.

SAMPLE COMBINATIONS



1-Seat with armrest (left) / 2-Seat with extended seat (right)



1-Seat with small chaise longue / 2-Seat



2-Seat with armrest (left) / 1-Seat with small chaise longue



2-Seat / 2-Seat / 2-Seat with extended seat (right)



2-Seat with armrest (left) / 2-Seat / 2-Seat with extended seat (right)



Pouf



DIMENSIONS

Individual modules
Seat depth: 74 cm

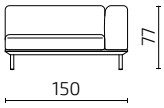

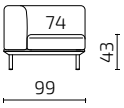

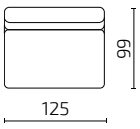

S77-1

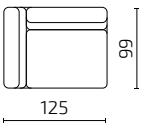

S77-1CL

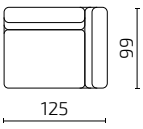

S77-1CR

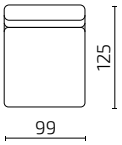

S77-1D

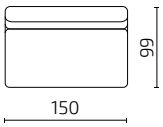

S77-2

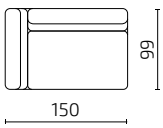

S77-2CL

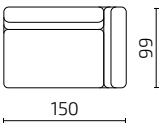

S77-2CR

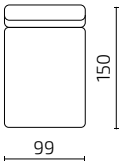

S77-2D

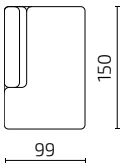

S77-2SDL

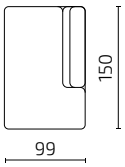

S77-2SDR

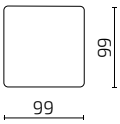

S77-1F

Modules to combine

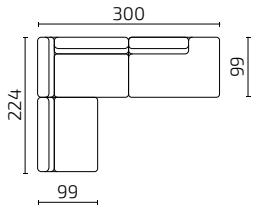

S77-12CL2SDR

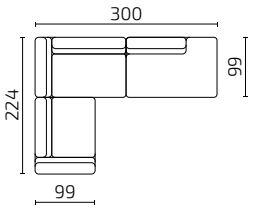

S77-1CL2CL2SDR

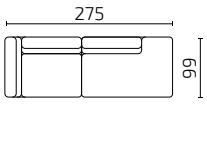

S77-1CL2SDR

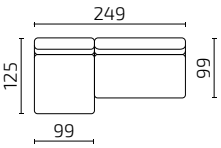

S77-1D2

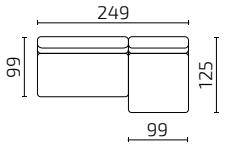

S77-21D

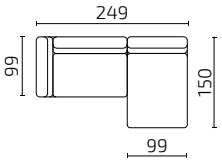

S77-2CL2D

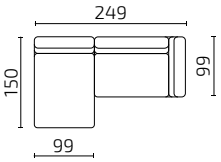

S77-2D2CR

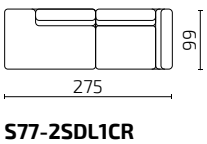

S77-2SDL1CR

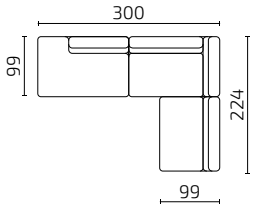

S77-2SDL2CR1

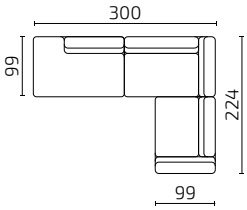

S77-2SDL2CR1CR

All dimensions provided in centimetres.

Movable armrest/ side table

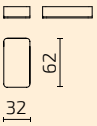

S77-KT1

Decorative cushion



S77-P1

Lilja

Work sofa

Design: Samuli Naamanka

Transforming public spaces with Nordic elegance. Created in collaboration with Finnish designer Samuli Naamanka, Lilja is a tribute to the harmony and timelessness of Nordic design Warm and friendly solid wood and elegant lines make up a pleasing piece of furniture that reflects the Nordic attitude to style and quality.

Lilja has flexibility at her heart, allowing you to tailor its setup to suit various spaces and personal tastes. Cherry-pick the armrest combinations. Optional backseat and armrest pillows enhance the comfort, inviting you to sink in and experience its welcoming embrace. Whether it's your office or any public area, Lilja promises to transform ordinary spaces into cozy, inviting environments. much you value their comfort and wellbeing. Put the finishing touches to your Social Zone with this inviting sofa.





Welcome Zone



Social Zone

Foster connections among colleagues

Welcome your visitors with a touch of home

Offer a restorative retreat from the daily grind

PRODUCT INFORMATION

Versions
Many different modules with and without armrests

Modularity
Modules can be connected together

Accessories
Additional backseat and armrest pillows

Warranty
5 years

Sustainability
Based on principles of the circular economy

Certification

FSC
www.fsc.org
FSC™C170945
Look out for our FSC-certified products

STANDARD MATERIALS

Frame
Solid wood and plywood

Seat and backrest
Durable HR foam; fire retardant HR foam on request

Leg frames
Solid oak / Powder-coated metal

Pillows
Feather or fibre filling

Fabric upholstery
The cover fabric is not removable
Choose any fabric from **Intuit Standard Fabric Collection**

Additional information
As part of after-sales service we offer the change of cover fabric and all other components if needed

Tartu University Clinic, Estonia. Photo: Märt Lillesiim



FINISHING OPTIONS

Leg frame

Solid oak

Natural

Powder-coated metal

Jet Black RAL 9005

Other finishing options available on request.



SAMPLE COMBINATIONS

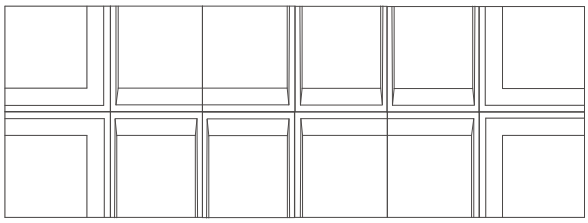

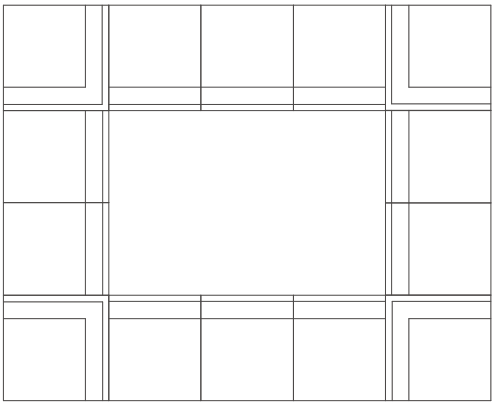

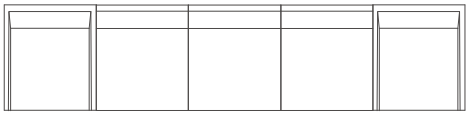

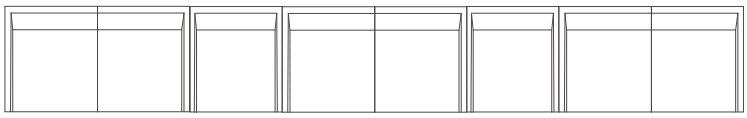

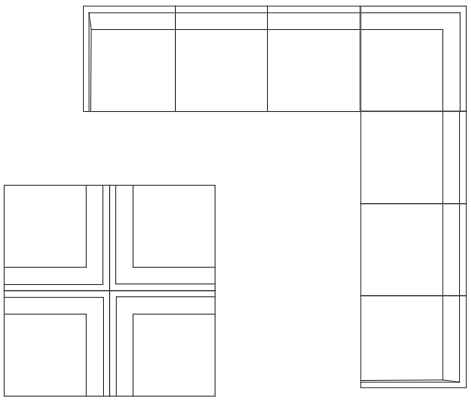

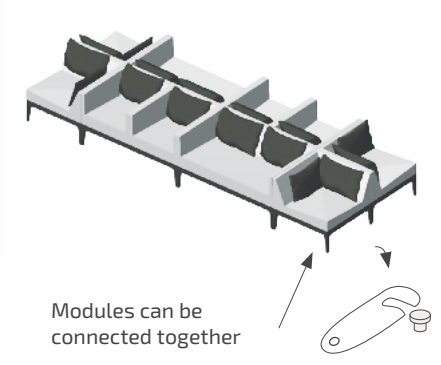



Tartu University Clinic, Estonia. Photo: Märt Lillesiim



Tartu University Clinic, Estonia. Photo: Märt Lillesiim

DIMENSIONS

Modules

Seat depth: 61 cm, with extra pillow 48 cm

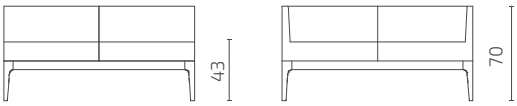

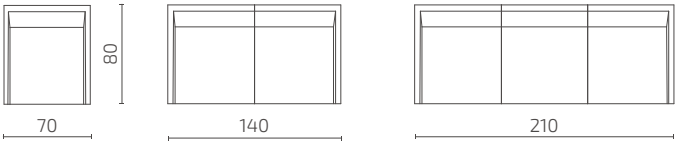

S102-S1 **S102-1CL1CR** **S102-1CL11CR**

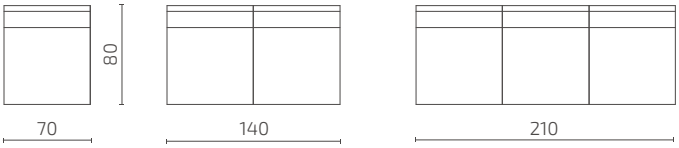

S102-1 **S102-11** **S102-111**

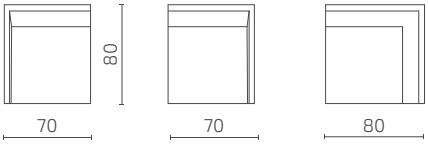

S102-1CL **S102-1CR** **S102-C**

Oak leg frames

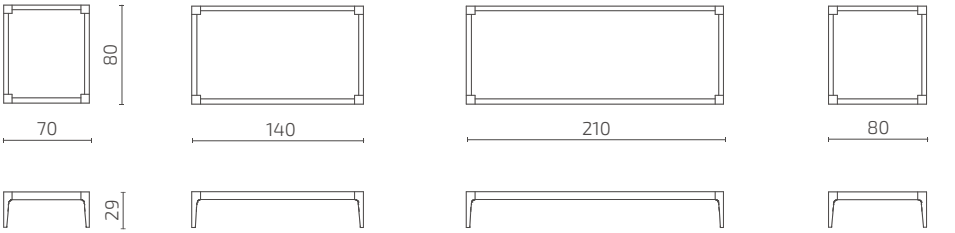

A0803-0039 **A0803-0040** **A0803-0041** **A0803-0042**

Metal leg frames

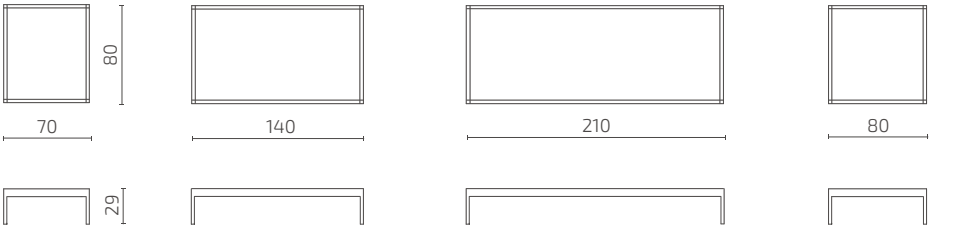

A0803-0050 **A0803-0051** **A0803-0052** **A0803-0053**

All dimensions provided in centimetres.

Pillows



S102-P
Back pillow



S102-KTP
Armest pillow

Loop, Duo & Twin

Available at pCon PLANNER

Poufs

Design: Lauri Visnapuu

We think you should be able to gather wherever inspiration strikes. Which is why we've designed our trio of playful poufs to be the ultimate in flexible seating.

Grab them by their tabs and pull them over to your colleague's desk. So that you can carry on forming your new idea, without getting a crick in your neck.





Welcome Zone



Social Zone



Collaboration Zone

Make your seating super flexible

Bring some playful energy

Gather wherever you need to

PRODUCT INFORMATION

Versions
Available in 3 different shapes

Warranty
5 years

Sustainability
Based on principles of the circular economy

Certification

FSC
www.fsc.org
FSC™C170945
Look out for our FSC-certified products

STANDARD MATERIALS

Frame
Solid wood and plywood

Seat
Durable HR foam; fire retardant HR foam on request

Fabric upholstery
The cover fabric is not removable
Choose any fabric from **Intuit Standard Fabric Collection**

Additional information
As part of after-sales service we offer the change of cover fabric and all other components if needed

DIMENSIONS

Loop

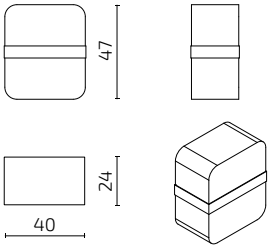

S116-F47

Duo

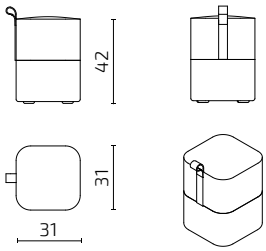

S117-F31

Twin

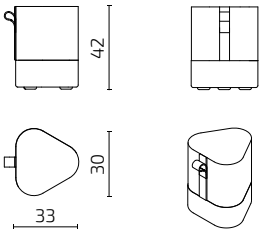

S118-F33

All dimensions provided in centimetres.



Meeter Modular

Available at pCon PLANNER

Sofa modules

Design: Argo Tamm

Don't let your chairs distract from your chat. You can use the effortless design of the Meeter sofa modules wherever you want to bring people together. Perfect for those office reception areas and work cafes, Meeter has also found a happy home in the dining halls of catering establishments.

Renowned for its exceptional adaptability in both height and length, the Meeter sofa seamlessly integrates into any milieu. These compact sofas are engineered for endurance, effortlessly withstanding heavy usage and frequent cleaning.





Welcome Zone



Social Zone

Create compact waiting spots

Make even your smaller dining areas comfy

Optimize space with flexible seating

PRODUCT INFORMATION

Versions
Available in 3 different heights and in 7 standard lengths

Modularity
Modules can be connected together

Legs
Available with regular legs and plinth

Accessories
Attached side table to add functionality
Custom-made planter boxes to offer an organic touch of privacy

Electrical outlet
Intergrated electrical outlet

Warranty
10 years

Sustainability
Based on principles of the circular economy

Test & Certification
- L2 European Standard strength, durability and safety certificate
- EU Ecolabel Certified
- We use FSC® certified wood in the construction of Meeter Modular

EU Ecolabel: EE/049/001

We hold FSC certification

STANDARD MATERIALS

Frame
Solid wood and plywood

Seat & backrest
Durable HR foam; fire retardant HR foam on request

Legs
Solid oak / Powder-coated metal
Plinth: Veneer / Melamine / High-pressure laminate

Table
Mass colored wood fibreboard / high-pressure laminate top with plywood edge; powder-coated metal frame

Planter box
Veneer / Melamine / High-pressure laminate

Fabric upholstery
The cover material is not removable
Choose any fabric from **Intuit Standard Fabric Collection**

Additional information
As part of after-sales service we offer the change of cover fabric and all other components if needed

Swedbank Eesti in Tallinn, Estonia. Photo: Helis Mahmastol



LEGS



Solid oak legs, stained and varnished; anti-slip soles



Powder-coated metal; anti-slip soles. Available in U-shape and straight legs



Plinth
Additional cost will apply

Solid oak

Whitened	
Natural	
Wenge	
Black	

Powder-coated metal

Jet Black RAL 9005	

Plinth

Natural oak veneer	
Black melamine	
Black high-pressure laminate	

Other finishing options available on request.

TABLE

Tabletop

High-pressure laminate, plywood edge

Black	

Mass-colored wood fibreboard

Grey	
Black	

Table frame

Powder-coated metal

Jet Black RAL 9005	

Other finishing options available on request.



Meeter side table

PLANTER BOX

Natural oak veneer	
Black melamine	
Black high-pressure laminate	

Other finishing options available on request.



ELECTRICAL OUTLET

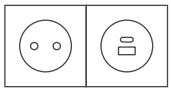

220V + USB A & C

Other electrical outlet combinations available on request.

Berker Integro Flow
Color: Anthracite Matt

Available options DK, EU, FR, UK

Totaljobs office in Portsmouth, UK. Photo: Soren Kristensen



SAMPLE MODULES



Length 100 cm / H1



Length 100 cm / H2



Length 100 cm / H3



Left corner / Length 100 cm / H1



Left corner / Length 100 cm / H2



Left corner / Length 100 cm / H3



Right corner / Length 100 cm / H1



Right corner / Length 100 cm / H2



Right corner / Length 100 cm / H3

DIMENSIONS

Modules

Seat depth: 45 cm / Seat height: 46 cm
Standard lenghts 62 / 80 / 100 / 120 / 150 / 180 / 200
Custom lenghts available up to 230 cm

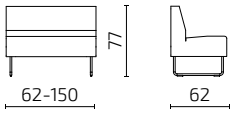

S108-1H162
S108-1H180
S108-1H1100
S108-1H1120
S108-1H1150
S108-1H1180
S108-1H1200

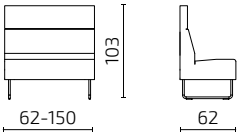

S108-1H262
S108-1H280
S108-1H2100
S108-1H2120
S108-1H2150
S108-1H2180
S108-1H2200

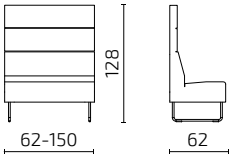

S108-1H362
S108-1H380
S108-1H3100
S108-1H3120
S108-1H3150
S108-1H3180
S108-1H3200

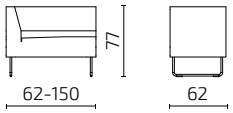

S108-1CLH162
S108-1CLH180
S108-1CLH1100
S108-1CLH1120
S108-1CLH1150
S108-1CLH1180
S108-1CLH1200

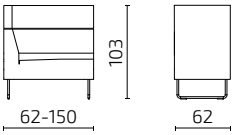

S108-1CLH262
S108-1CLH280
S108-1CLH2100
S108-1CLH2120
S108-1CLH2150
S108-1CLH1180
S108-1CLH1200

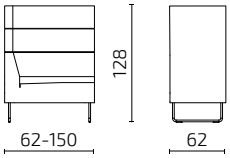

S108-1CLH362
S108-1CLH380
S108-1CLH3100
S108-1CLH3120
S108-1CLH3150
S108-1CLH3180
S108-1CLH3200

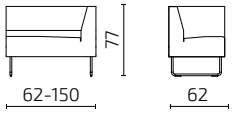

S108-1CRH162
S108-1CRH180
S108-1CRH1100
S108-1CRH1120
S108-1CRH1150
S108-1CRH1180
S108-1CRH1200

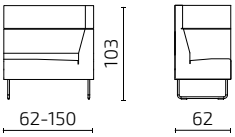

S108-1CRH262
S108-1CRH280
S108-1CRH2100
S108-1CRH2120
S108-1CRH2150
S108-1CRH2180
S108-1CRH2200

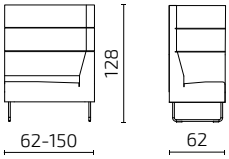

S108-1CRH362
S108-1CRH380
S108-1CRH3100
S108-1CRH3120
S108-1CRH3150
S108-1CRH3180
S108-1CRH3200

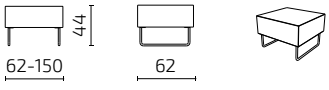

S108-F62
S108-F80
S108-F100
S108-F120
S108-F150
S108-F180
S108-F200

All dimensions provided in centimetres.

Table





S108-T1

Planter boxes

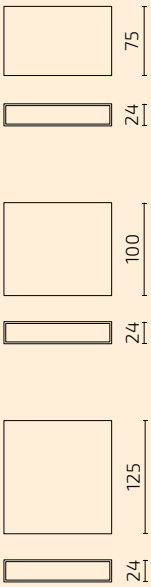

Length tailored to the full length of modular sofa

Inner dimensions

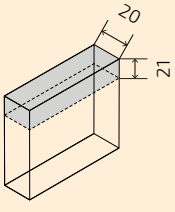



Swedbank Eesti in Tallinn, Estonia. Photo: Helis Mahmastol

Shallow seating makes the Meeter perfect for tighter places



Finnish Transport Infrastructure Agency in Helsinki, Finland. Photo: Hannakaisa Pekkala

Meeter Gap

Maintenance-smart modular sofa modules

Design: Argo Tamm

Developed as an evolution of Intuit's best-selling Meeter modular sofa series, Meeter Gap is designed to solve one of the most common yet costly challenges in high-traffic environments: difficult cleaning and ongoing maintenance.

Its key innovation lies in the structural gap between the seat cushion and backrest — a purposeful design detail that allows crumbs, debris and dirt to fall directly to the floor instead of accumulating inside the furniture. This significantly simplifies cleaning, speeds up maintenance routines and helps reduce long-term upkeep costs in spaces where furniture is used intensively every day.

Especially suited for dining areas, educational settings, waiting zones and other demanding public interiors, Meeter Gap combines the proven flexibility and modularity of the Meeter family with a practical operational advantage. The result is a seating solution that not only supports layout adaptability and user comfort, but also improves day-to-day efficiency for operators and facility managers.





Welcome Zone



Social Zone

Create more efficient, lower-maintenance spaces

Simplify daily cleaning and upkeep

Design smarter environments

PRODUCT INFORMATION

Versions
Available in one height and in four standard lengths for the straight modules and three standard lengths for the sofa versions. Straight and inward and outward-facing curved modules.

Modularity
Modules can be connected together

Accessories
Attached side table to add functionality

Electrical outlet
Integrated electrical outlet

Warranty
5 years

Sustainability
Based on principles of the circular economy

Certification

FSC
www.fsc.org
FSC™C170945
Look out for our FSC-certified products

STANDARD MATERIALS

Frame
Plywood and HDF

Seat & backrest
Durable HR foam; fire retardant HR foam on request

Legs
Powder-coated metal; plastic soles

Table
Mass colored wood fibreboard / high-pressure laminate top with plywood edge; powder-coated metal frame

Fabric upholstery
The cover material is not removable
Choose any fabric from **Intuit Standard Fabric Collection**

Additional information
As part of after-sales service we offer the change of cover fabric and all other components if needed



LEGS

Powder-coated metal

Jet Black RAL 9005

Other finishing options available on request.



TABLE

Tabletop

High-pressure laminate, plywood edge

Black

Mass-colored wood fibreboard

Grey

Black

Table frame

Powder-coated metal

Jet Black RAL 9005

Other finishing options available on request.



Meeter side table

ELECTRICAL OUTLET

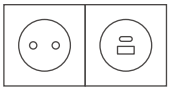

220V + USB A & C

Other electrical outlet combinations available on request.

Berker Integro Flow
Color: Anthracite Matt

Available options DK, EU, FR, UK

SAMPLE COMBINATIONS

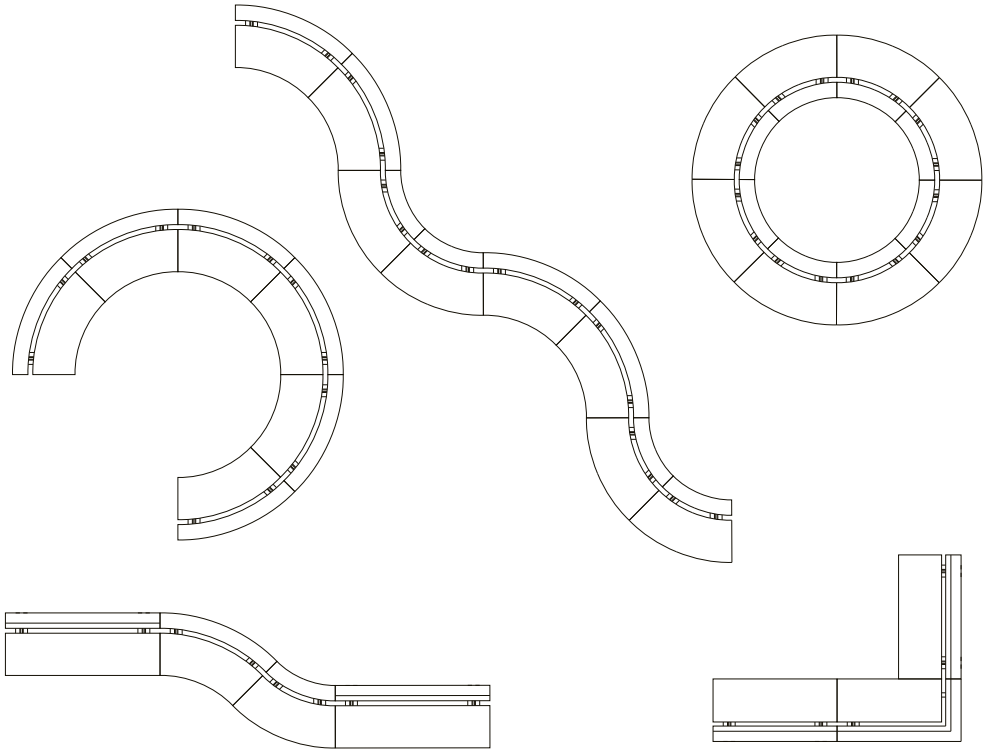









DIMENSIONS

Modules
Seat depth: 46 cm / Seat height: 45 cm

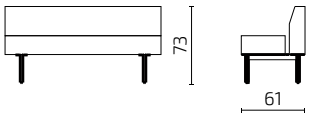

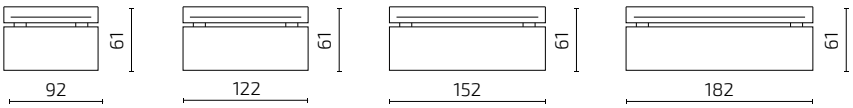

S83-1 **S83-1,5** **S83-2** **S83-3**

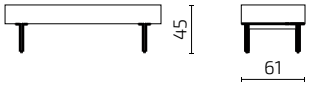

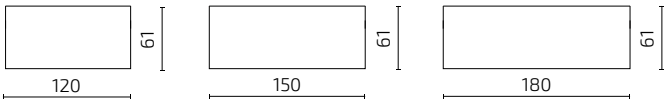

S83-F1 **S83-F2** **S83-F3**

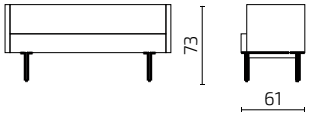

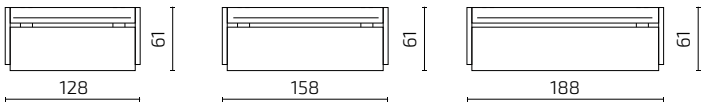

S83-S1.5 **S83-S2** **S83-S3**

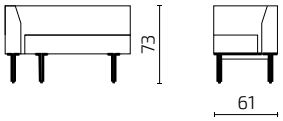

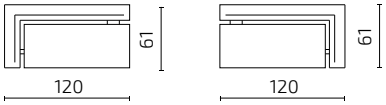

S83-CL **S83-CR**

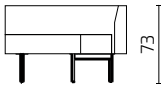

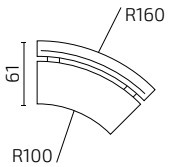

S83-SR

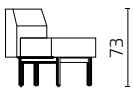

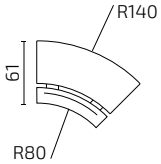

S83-VR

Table

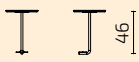

Ø 33

S108-T1

All dimensions provided in centimetres.

Meeter Round

Available at pCon PLANNER

Sofa modules

Design: Argo Tamm

Meeter Round, an evolution of the straight module, streamlines rows of seating. Its gently rounded silhouette and smooth curves optimise available space, creating an inviting seating area perfect for waiting rooms, cafés, and other public spaces.





Welcome Zone



Social Zone

Create compact waiting spots

Add elegance with a rounded silhouette

PRODUCT INFORMATION

Versions
Available in 3 different heights and 2 different shapes

Modularity
Modules can be connected together

Legs
Available with regular legs and plinth

Accessories
Attached side table to add functionality

Warranty
5 years

Sustainability
Based on principles of the circular economy

Certification

FSC
www.fsc.org
FSC™C170945
Look out for our FSC-certified products

STANDARD MATERIALS

Frame
Solid wood and plywood

Seat & backrest
Durable HR foam; fire retardant HR foam on request

Legs
Solid oak / Powder-coated metal
Plinth: Veneer / High-pressure laminate

Table
Mass colored wood fibreboard / high-pressure laminate top with plywood edge; powder-coated metal frame

Fabric upholstery
The cover material is not removable
Choose any fabric from **Intuit Standard Fabric Collection**

Additional information
As part of after-sales service we offer the change of cover fabric and all other components if needed



LEGS



Solid oak legs, stained and varnished; anti-slip soles



Powder-coated metal; anti-slip soles. Available in U-shape and straight legs



Plinth
Additional cost will apply

Solid oak

Whitened	
Natural	
Wenge	
Black	

Powder-coated metal

Jet Black RAL 9005	

Plinth

Natural oak veneer	
Black high-pressure laminate	

Other finishing options available on request.

TABLE

Tabletop

High-pressure laminate, plywood edge

Black	

Mass-colored wood fibreboard

Grey	
Black	

Table frame

Powder-coated metal

Jet Black RAL 9005	

Other finishing options available on request.



Meeter side table

DIMENSIONS

Modules
Seat depth: 45 cm / height: 46 cm

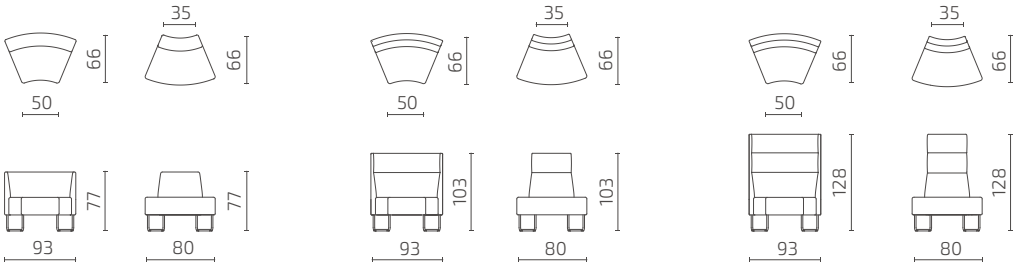

S108-1SR45H1 **S108-1VR45H1** **S108-1SR45H2** **S108-1VR45H2** **S108-1SR45H3** **S108-1VR45H3**

All dimensions provided in centimetres.

Table



Ø 33

S108-T1

SAMPLE COMBINATIONS

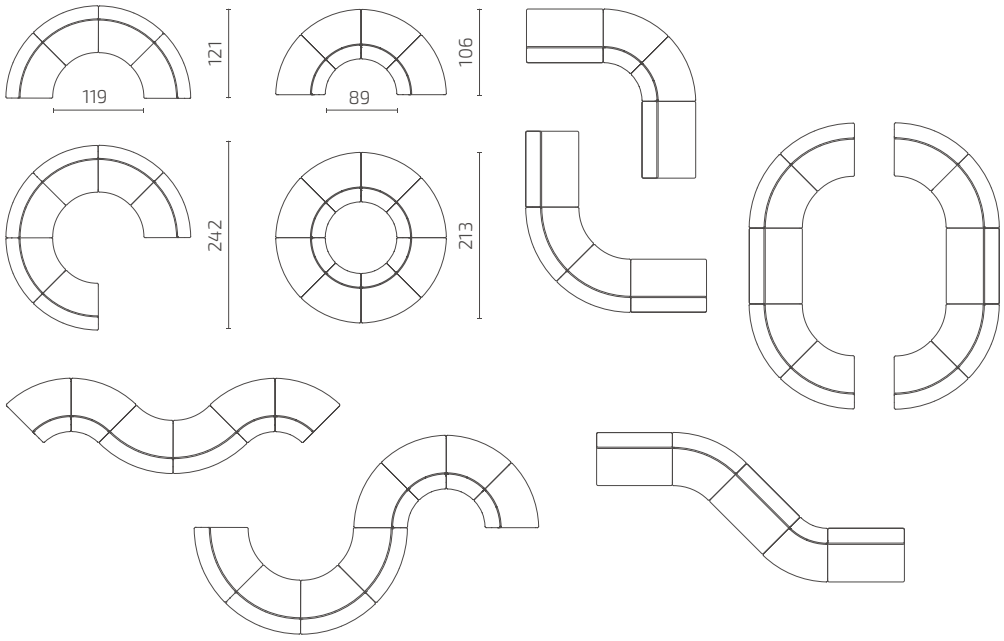



Round module with inner radius / H3

Round module with outer radius / H3

Meeter Sofa & Armchair

Available at pCon PLANNER

Sofa and armchair
Design: Argo Tamm

The modern, simple lines of the Armchair & Sofa come in standard dimensions. Available in three widths, the modules seat one, two, or three people side by side. Choose from three backrest heights – the higher, the more private.







Welcome Zone



Social Zone

Create compact waiting spots

Elevate privacy with stylish high walls

PRODUCT INFORMATION

Versions
Available in 3 different heights and 3 different sizes

Legs
Available with regular legs and plinth

Accessories
Attached side table to add functionality
Custom-made planter boxes to offer an organic touch of privacy

Electrical outlet
Intergrated electrical outlet

Warranty
10 years

Sustainability
Based on principles of the circular economy

Test & Certification
- L2 European Standard strength, durability and safety certificate
- EU Ecolabel Certified

EU Ecolabel: EE/049/001

Look out for our FSC-certified products

STANDARD MATERIALS

Frame
Solid wood and plywood

Seat & backrest
Durable HR foam; fire retardant HR foam on request

Legs
Solid oak / Powder-coated metal
Plinth: Veneer / Melamine / High-pressure laminate

Tables
Mass colored wood fibre board / high-pressure laminate top with plywood edge; powder-coated metal frame

Planter box
Veneer / Melamine / High-pressure laminate

Fabric upholstery
The cover material is not removable
Choose any fabric from **Intuit Standard Fabric Collection**

Additional information
As part of after-sales service we offer the change of cover fabric and all other components if needed



LEGS



Solid oak legs, stained and varnished; anti-slip soles



Powder-coated metal; anti-slip soles. Available in U-shape and straight legs



Plinth
Additional cost will apply

Solid oak

Whitened	
Natural	
Wenge	
Black	

Powder-coated metal

Jet Black RAL 9005	

Plinth

Natural oak veneer	
Black melamine	
Black high-pressure laminate	

Other finishing options available on request.

TABLE

Tabletop

High-pressure laminate, plywood edge

Black	

Mass-colored wood fibreboard

Grey	
Black	

Table frame

Powder-coated metal

Jet Black RAL 9005	

Other finishing options available on request.



Meeter side table

PLANTER BOX

Natural oak veneer	
Black melamine	
Black high-pressure laminate	

Other finishing options available on request.



ELECTRICAL OUTLET

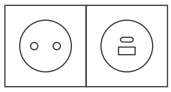

220V + USB A & C

Other electrical outlet combinations available on request.

Berker Integro Flow
Color: Anthracite Matt

Available options DK, EU, FR, UK





Armchair / H1



Armchair / H2



Armchair / H3





Sofa 2-Seat / H1





Sofa 2-Seat / H2





Sofa 2-Seat / H3

DIMENSIONS

Armchair and sofa
Seat depth: 45 cm / Seat height: 46 cm

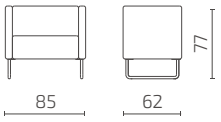

S108-S1H1

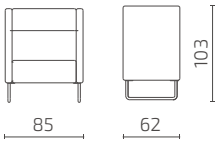

S108-S1H2

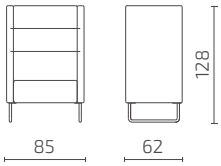

S108-S1H3

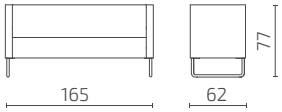

S108-S2H1

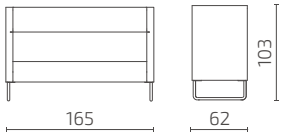

S108-S2H2

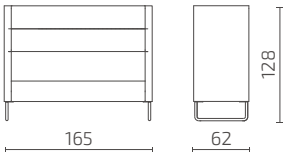

S108-S2H3

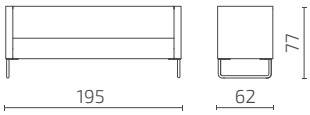

S108-S3H1

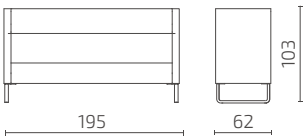

S108-S3H2

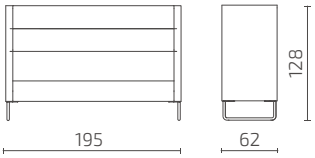

S108-S3H3

All dimensions provided in centimetres.

Table





S108-T1

Planter boxes

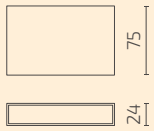

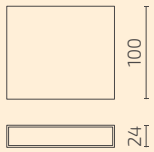

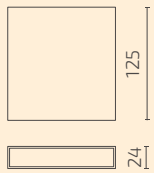

Length tailored to Meeter sofa

Inner dimensions

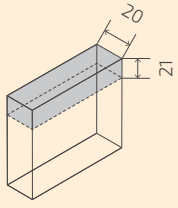

Meeter Workbay

Available at pCon PLANNER

Workstation

Design: Argo Tamm

The calm walls of the Meeter Workbay can contain the most important of conversations, or welcome the individual in for some deep focused work. We've all found the need for quiet and calm in the middle of a busy workplace. That's why we're helping you create the perfect Concentration Zone.

Meeter Workbay's minimalist design makes it an easy addition to any open-plan office, letting you create the private spaces you need.





Collaboration Zone



Concentration Zone

- Divide your space organically
- Give the option of focus and seclusion
- Cut down on background noise
- Hold your own private meeting

PRODUCT INFORMATION

Versions
Available in 3 different sizes

Legs
Available with regular legs and plinth

Accessories
Additional tables to add functionality to the seating area

Electrical outlet
Intergrated electrical outlet

Warranty
5 years

Sustainability
Embraces the principles of circular design

Test & Certification
- L1 European Standard strength, durability and safety certificate
- EU Ecolabel Certified

EU Ecolabel: EE/049/001

Look out for our FSC-certified products

STANDARD MATERIALS

Frame
Solid wood and plywood

Seat & backrest
Durable HR foam; fire retardant HR foam on request

Wall fastenings
Powder-coated metal

Legs
Solid oak / Powder-coated metal
Plinth: Veneer / Melamine / High-pressure laminate

Tables
Matt high-pressure laminate top with powder-coated metal legs

Fabric upholstery
The cover material is not removable
Choose any fabric from **Intuit Standard Fabric Collection**

Additional information
As part of after-sales service we offer the change of cover fabric and all other components if needed

Finnish Transport Infrastructure Agency in Helsinki, Finland. Photo: Hannakaisa Pekkala



LEGS



Solid oak legs, stained and varnished; anti-slip soles



Powder-coated metal; anti-slip soles. Available in U-shape and straight legs



Plinth
Additional cost will apply

Solid oak

Whitened	
Natural	
Wenge	
Black	

Other finishing options available on request.

Powder-coated metal

Jet Black RAL 9005	

Plinth

Natural oak veneer	
Black melamine	
Black high-pressure laminate	

TABLES

Aide tabletop

High-pressure laminate

Alpine White Egger W1100 PM	
Soft Black Egger U999 PM	
Stone Green Egger U665 PM	
Garnet Red Egger U399 PM	



Aide table legs

Powder-coated metal

Signal White RAL 9003	
Jet Black RAL 9005	
Tarpaulin Grey RAL 7010	
Black Red RAL 3007	

Other finishing options available on request.

ELECTRICAL OUTLET

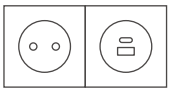

220V + USB A & C

Other electrical outlet combinations available on request.

Berker Integro Flow
Color: Anthracite Matt

Available options DK, EU, FR, UK

DIMENSIONS

Workbay
Seat height: 46 cm

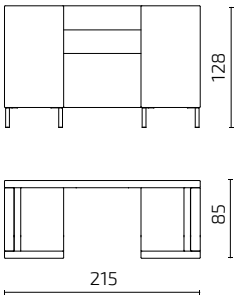

S108-WS1H3

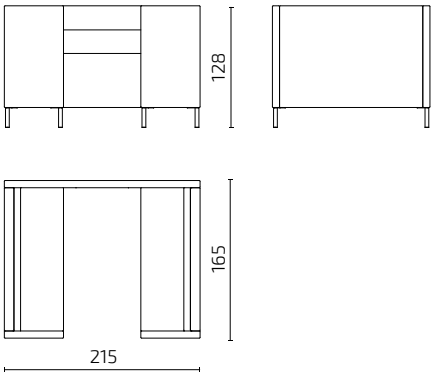

S108-WS2H3

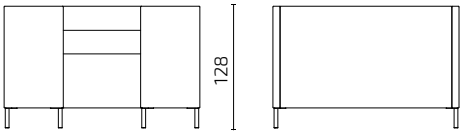

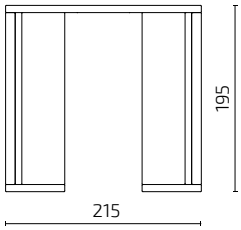

S108-WS3H3

All dimensions provided in centimetres.

Tables

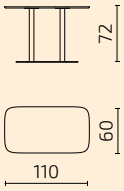

S128-T1M
AIDE table

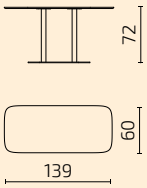

S128-T3M
AIDE table



Node

Modular sofa system
Design: Argo Tamm

Designed for larger public interiors where flexibility, presence and spatial structure must work together, Node is a modular sofa system created to shape central spaces with confidence. Developed as a natural evolution of Intuit's highly versatile Meeter series, Node expands the same core strengths into a larger, more expressive format — offering greater comfort, stronger visual presence and broader planning potential for spacious environments.





Welcome Zone



Social Zone



Collaboration Zone

Shape larger environments with flexibility

Build inviting spaces that adapt

Create central spaces

PRODUCT INFORMATION

Versions
Available in 2 heights and 4 lengths
Straight and inward and outward-facing curved modules

Modularity
Modules can be connected together

Legs
Black plastic

Accessories
Attached side table to add functionality

Electrical outlet
Integrated in the table top

Warranty
5 years

Certification

FSC
www.fsc.org
FSC™C170945
Look out for our FSC-certified products

STANDARD MATERIALS

Frame
Plywood, high density fiberboard

Seat & backrest
Durable HR foam; fire retardant HR foam on request

Table
Mass colored MDF / high-pressure laminate top;
powder-coated metal frame

Fabric upholstery
The cover material is not removable
Choose any fabric from **Intuit Standard Fabric Collection**

Additional information
As part of after-sales service we offer the change of cover fabric and all other components if needed



FINISHING OPTIONS

Tabletop

High-pressure laminate

Alpine White Egger W1100 PM	
Soft Black Egger U999 PM	
Stone Green Egger U665 PM	
Garnet Red Egger U399 PM	

Mass-colored MDF

Natural	

Other finishing options available on request.

Table frame

Powder-coated metal

Jet Black RAL 9005	





With its modular logic, Node allows designers to build straight, curved and expansive seating landscapes that adapt to the scale and rhythm of each project. Available in two heights and multiple straight and rounded modules, Node supports everything from open social interaction to more defined spatial zoning.

Its larger form makes it particularly well suited for foyers, waiting areas, hospitality spaces, educational hubs and public interiors where furniture must do more than provide seating — it defines the atmosphere and creates purposeful gathering points.

DIMENSIONS

Straight modules

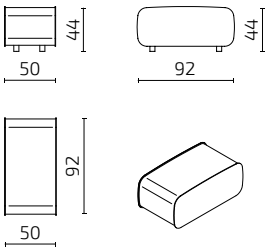

S84-1F

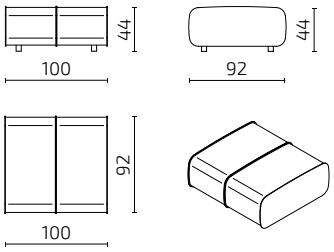

S84-2F

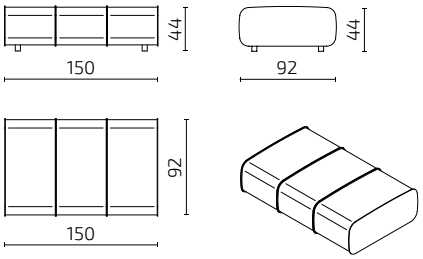

S84-3F

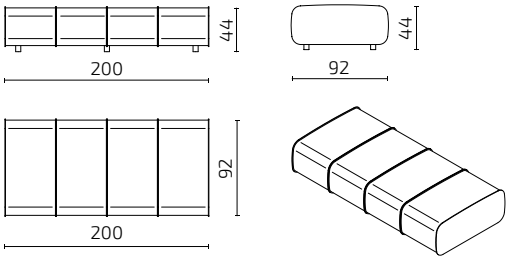

S84-4F

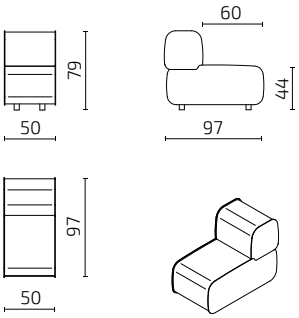

S84-1SH1

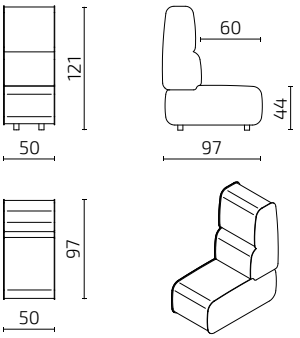

S84-1SH2

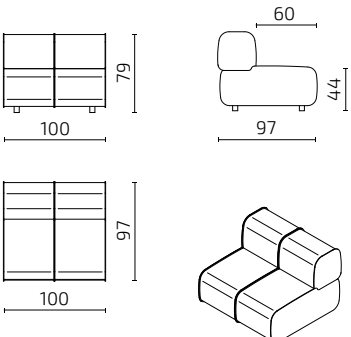

S84-2SH1

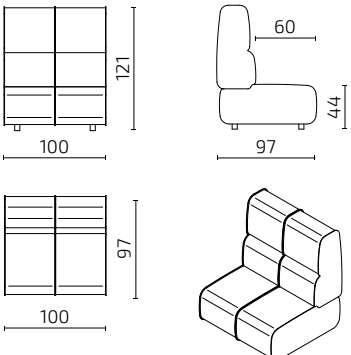

S84-2SH2

All dimensions provided in centimetres.

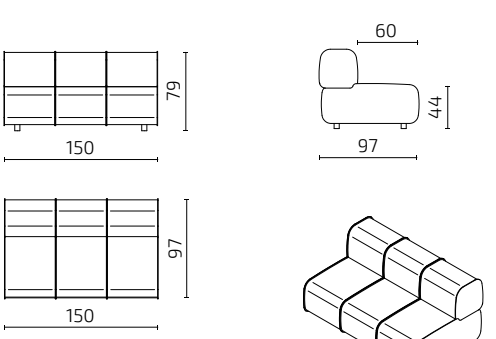

S84-3SH1

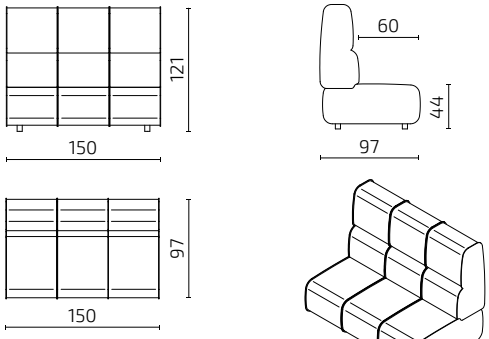

S84-3SH2

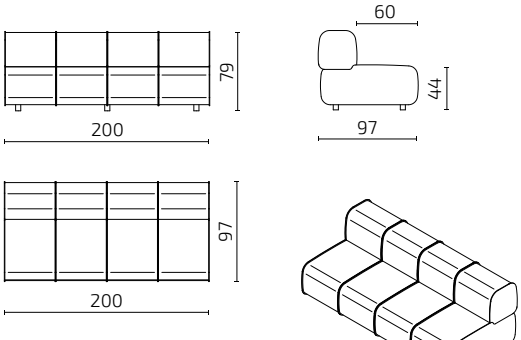

S84-4SH1

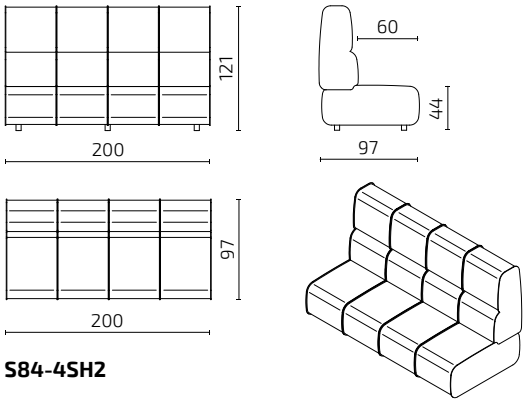

S84-4SH2

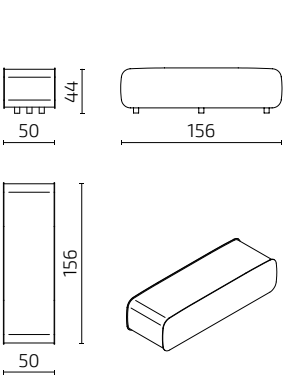

S84-IS1F

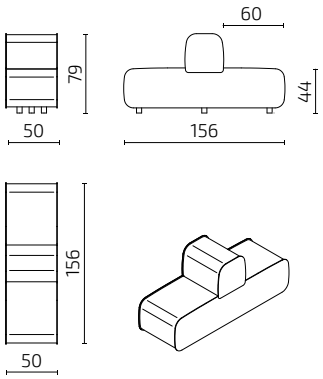

S84-1ISH1

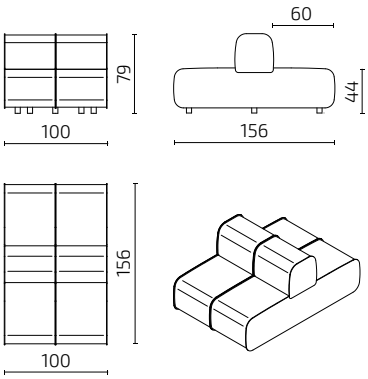

S84-2ISH1

Round modules

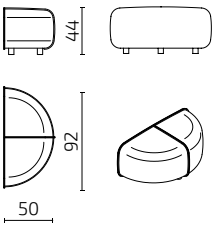

S84-FU

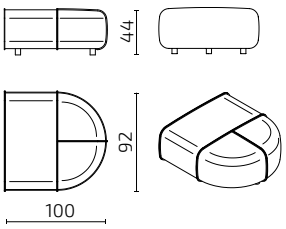

S84-1FU

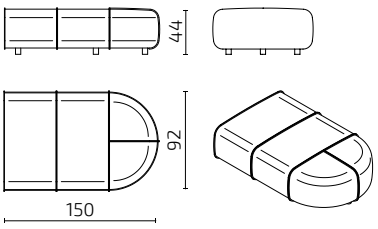

S84-2FU

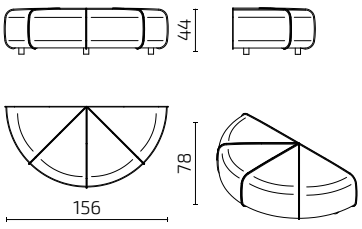

S84-IS1FU

All dimensions provided in centimetres.

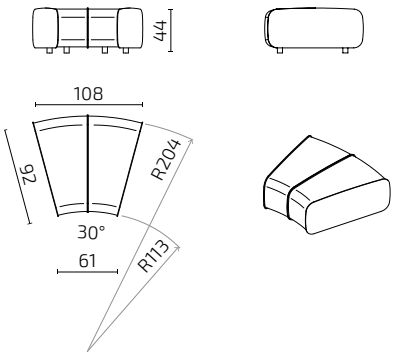

S84-1RF

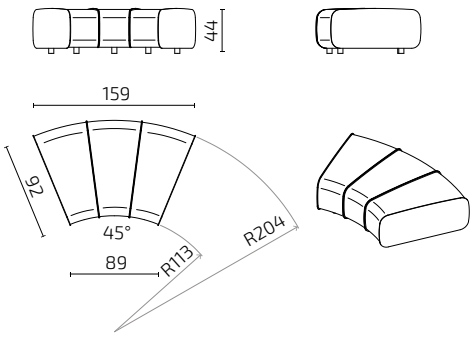

S84-2RF

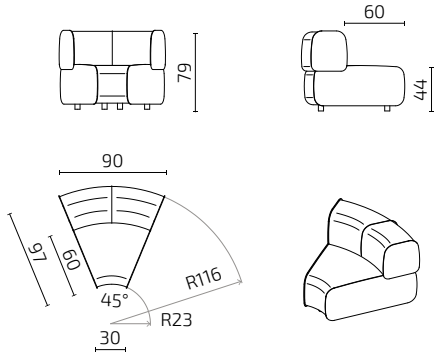

S84-CH1

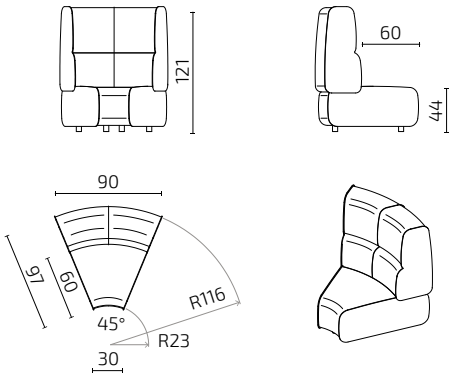

S84-CH2

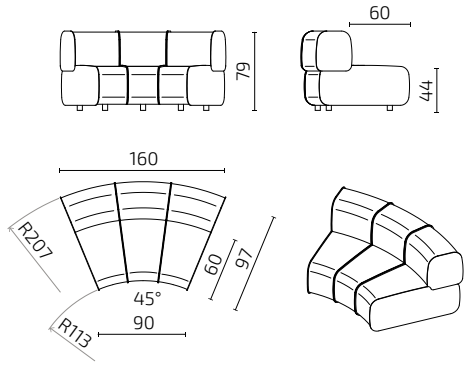

S84-1SRH1

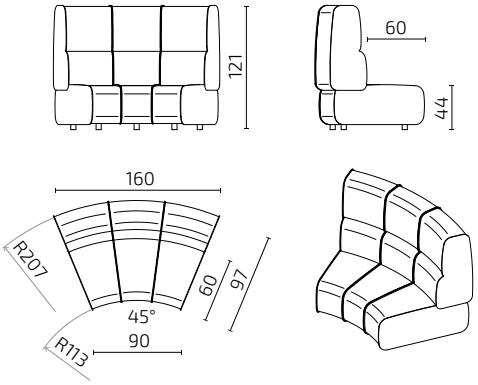

S84-1SRH2

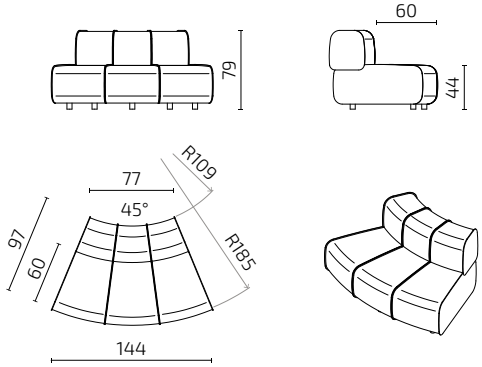

S84-1VRH1

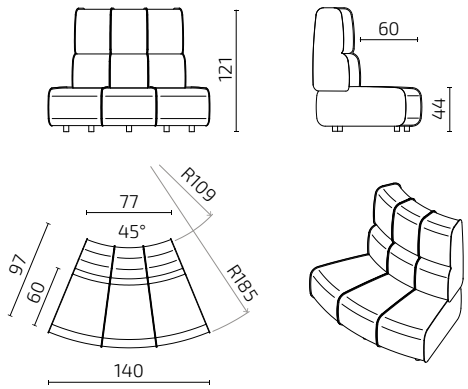

S84-1VRH2

All dimensions provided in centimetres.

Tables

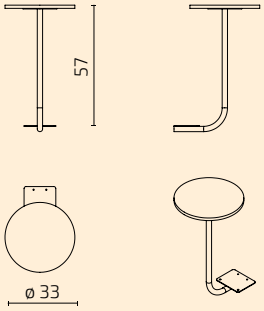

S84-T1

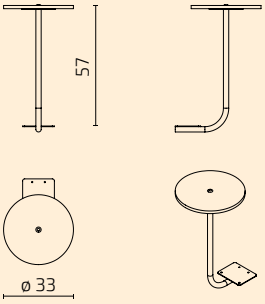

S84-T1E

Armrest

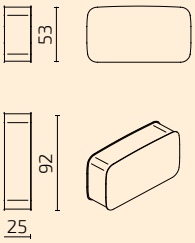

S84-KT1

All dimensions provided in centimetres.



Sans

Available at pCon PLANNER

Soft work sofa

Design: Argo Tamm

The Sans versatile sofa family provides a welcoming resting place in the welcome and social areas. Comfortable and practical for a communal space, the Sans is available as a classic sofa, or with an integral table. And, when equipped with eye-level walls, it's the perfect home for intimate conversations in any breakout spaces. Pop down your coffee cup, lean back, and enjoy the clean lines and sociable layout.









Welcome Zone



Social Zone



Collaboration Zone

- Divide your space organically
- Offer up moments of rest and relaxation
- Make your visitors feel at home

PRODUCT INFORMATION

Versions
Many different sizes and combinations

Accessories
Various additional tables
Additional pillows

Electrical outlet
Under the seating mounted to the frame
Integrated in the table top

Warranty
5 years

Sustainability
Based on principles of the circular economy

Test & Certification
L1 European Standard strength, durability and safety certificate

FSC
www.fsc.org
FSC™C170945
Look out for our FSC-certified products

STANDARD MATERIALS

Frame
Solid wood and plywood

Seat & backrest
Durable and fireproof HR-foam; nosag springs; fixed seat and back cushions

Legs
Powder-coated metal frame; plastic soles

Tables
High-pressure laminate table top with plywood edge, powder-coated metal frame

Pillows
Feather filling

Fabric upholstery
The cover material is not removable
Choose any fabric from **Intuit Standard Fabric Collection**

Additional information
As part of after-sales service we offer the change of cover fabric and all other components if needed

Co-working space NUUUORK at Berlin Airport, Germany. Photo: Ariane Brille



FINISHING OPTIONS

Leg frame

Powder-coated metal

Jet Black RAL 9005

Tabletop

High-pressure laminate, plywood edge

Black

Table frame

Powder-coated metal

Jet Black RAL 9005

Other finishing options available on request.





ELECTRICAL OUTLET

Under the seating attached to the frame

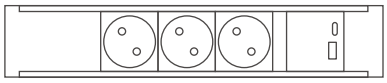

3x 220V + USB A & C

Bachmann Power Strip
Color: Black Matt

Available options DK, EU, FR, UK

Integrated in the table top



220V + USB A

Powerdot Compact 61
Color: Black Matt

Available options EU, FR, UK



220V + USB A & C

Powerdot 16
Color: Black Matt

Available options DK, EU, FR

Other electrical outlet combinations available on request.

Savant Zorg office in the Netherlands



SAMPLE COMBINATIONS

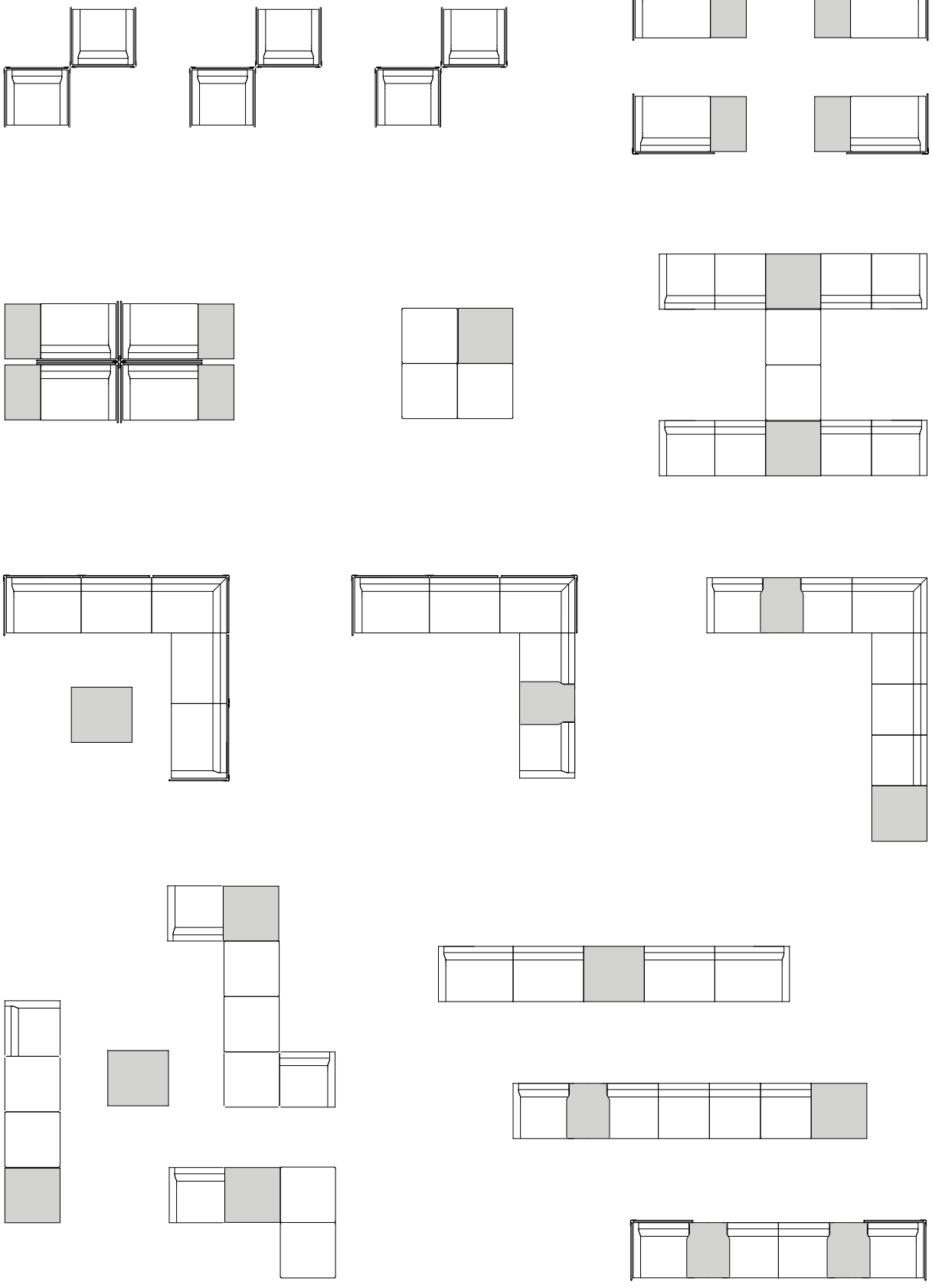























DIMENSIONS

Individual modules

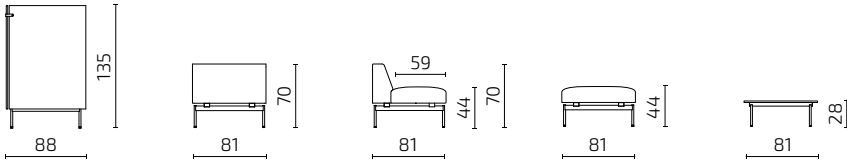

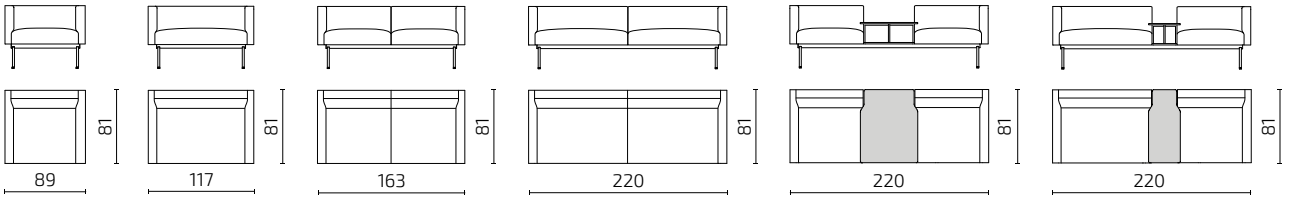

S113-S1 **S113-S15** **S113-S2** **S113-S3** **S113-1CLT41CR** **S113-15CLT51CR**

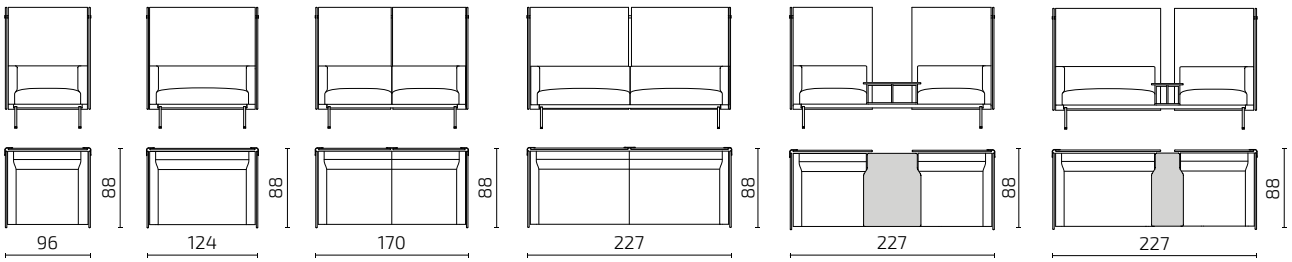

S113-SW1 **S113-SW15** **S113-SW2** **S113-SW3** **S113-1CLWT41CRW** **S113-15CLWT51CRW**

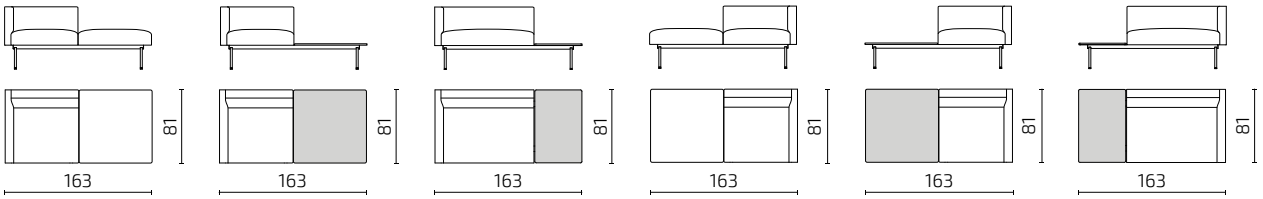

S113-1CLF1 **S113-1CLT2** **S113-15CLT3** **S113-F11CR** **S113-T21CR** **S113-T315CR**

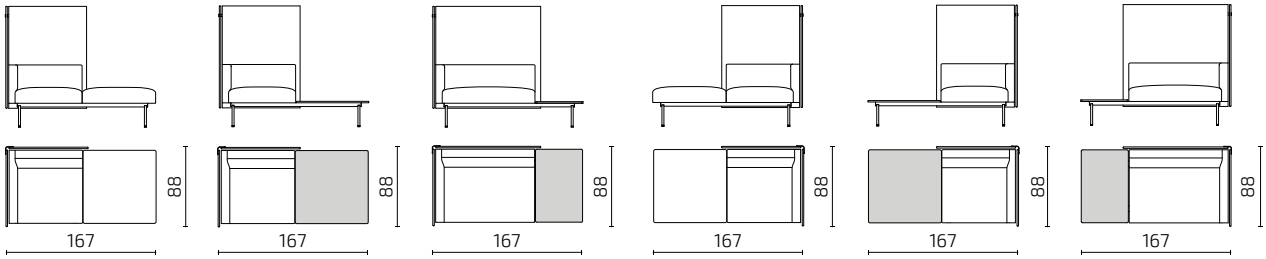

S113-1CLWF1 **S113-1CLWT2** **S113-15CLWT3** **S113-F11CRW** **S113-T21CRW** **S113-T315CRW**

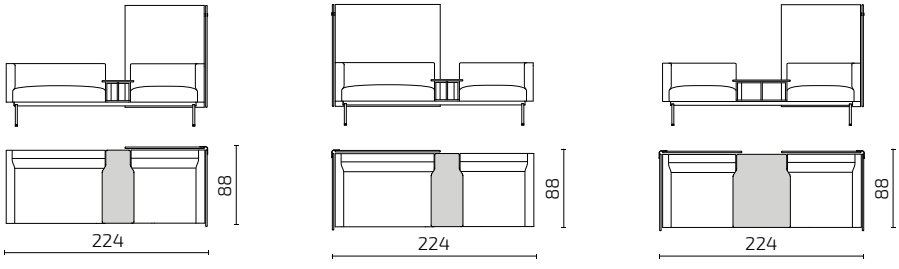

S113-15CLT51CRW **S113-15CLWT51CR** **S113-1CLT41CRW**

DIMENSIONS

Daybed

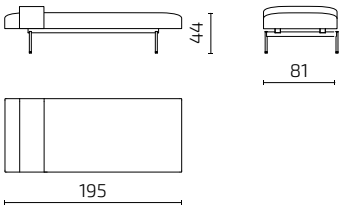

S113-DB1

Poufs and tables

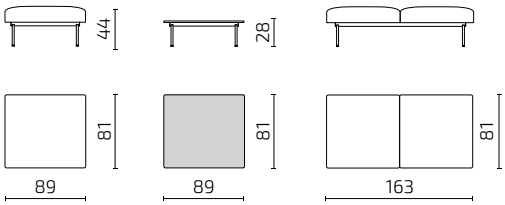

S113-F **S113-T1** **S113-F2**

Pillows

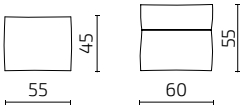

S113-P1 **S113-P2**

Modules to combine

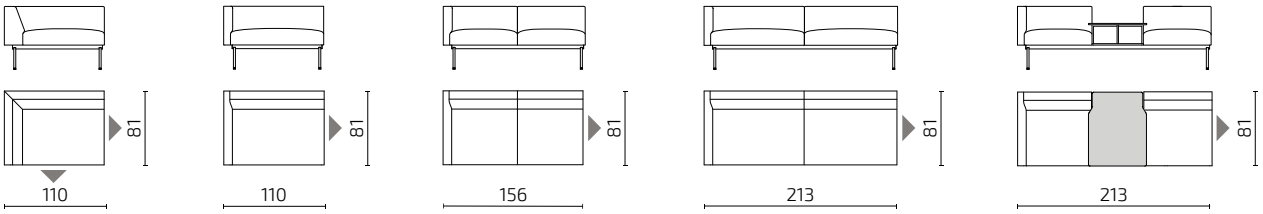

S113-CL **S113-15CL** **S113-2CL** **S113-3CL** **S113-1CLT41**

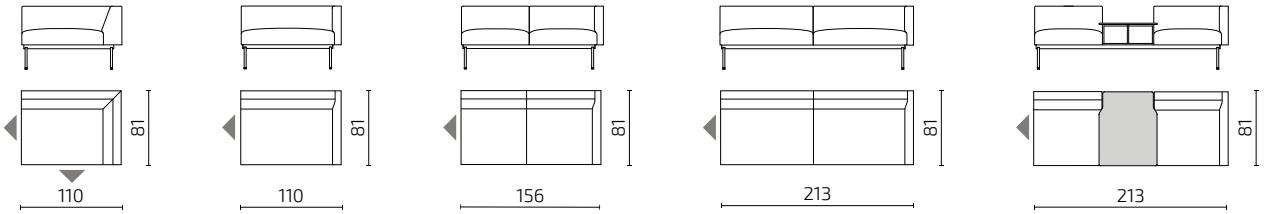

S113-CR **S113-15CR** **S113-2CR** **S113-3CR** **S113-1T41CR**

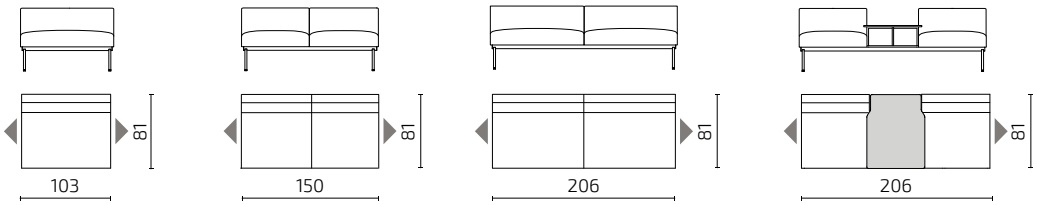

S113-15 **S113-2** **S113-3** **S113-1T41**

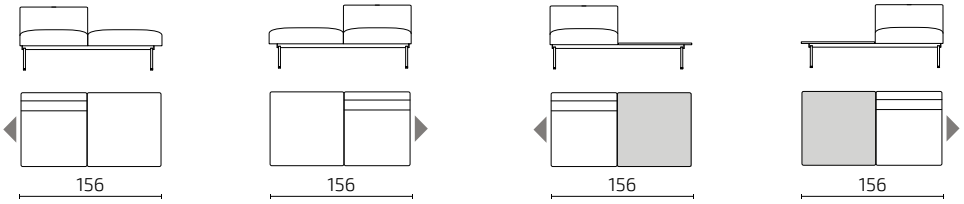

S113-1F1 **S113-F11** **S113-1T2** **S113-T21**

All dimensions provided in centimetres.

Modules to combine

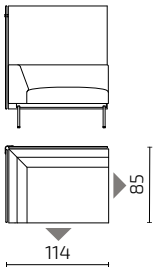

S113-CLW

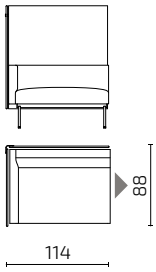

S113-15CLW

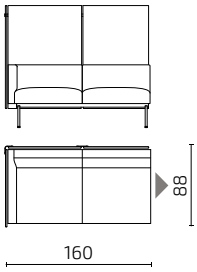

S113-2CLW

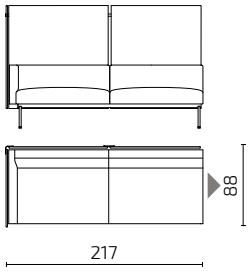

S113-3CLW

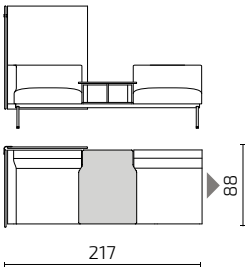

S113-1CLWT41

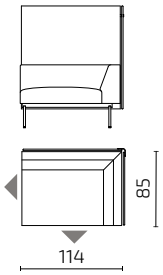

S113-CRW

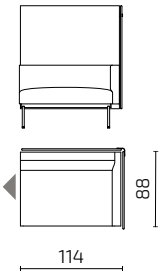

S113-15CRW

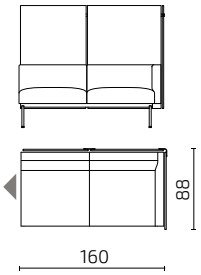

S113-2CRW

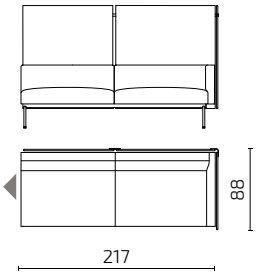

S113-3CRW

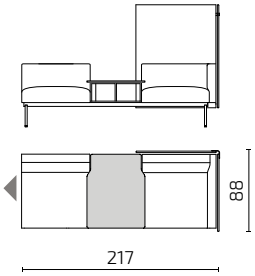

S113-1T41CRW

All dimensions provided in centimetres.





Utilitas Wind Office in Tallinn, Estonia. Photo: Märt Lillesiim

Sofi

Available at pCon PLANNER

Sofa & pouf system

Design: Janno Nõu, Iseasi

Kick back and relax. With their fresh look and slim proportions, the Sofi sofa and pouf make even the smallest Welcome Zones inviting. Your visitors will want to put their feet up and settle in with a coffee – so comfy they won't even mind if you're a little late!





Welcome Zone

- Create cosy spots in even the smallest spaces
- Move around as the conversation flows
- Make your guests feel at home

PRODUCT INFORMATION

Versions
Availabe as a sofa, bench and 2 pouf shapes

Warranty
5 years

Sustainability
Based on principles of the circular economy

Certification

FSC
www.fsc.org
FSC™C170945
Look out for our FSC-certified products

STANDARD MATERIALS

Frame
Solid wood and plywood

Seat & backrest
Durable HR foam; fire retardant HR foam on request

Legs
Stained solid oak

Fabric upholstery
The cover fabric is not removable
Choose any fabric from **Intuit Standard Fabric Collection**

Additional information
As part of after-sales service we offer the change of cover fabric and all other components if needed

Kääriku Sports Center, Estonia. Photo: Tõnu Runnel



LEGS

Solid oak

Whitened	
Natural	
Wenge	
Black	

Other finishing options available on request.





DIMENSIONS

Seat depth: 48 cm

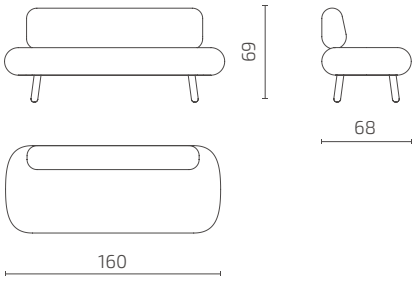

S105-S2

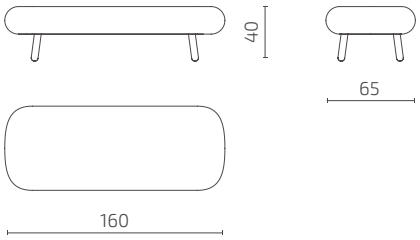

S105-F2

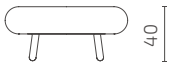

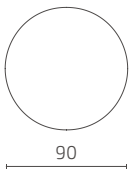

S105-F90

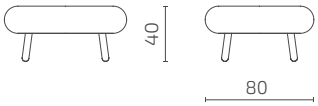

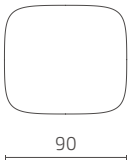

S105-F1

All dimensions provided in centimetres.



Takt

Complete micro workstation

Design: Lauri Visnapuu

Designed for moments that require focus in shared environments, TAKT is a compact, all-in-one micro workstation that creates a personal work zone wherever it's needed. Combining a comfortable upholstered seat, integrated work surface, lighting and power access within softly enclosing side panels, TAKT supports concentrated work without isolating the user from the surrounding space.

Ideal for modern offices, libraries, educational facilities and public interiors, TAKT offers a flexible solution for work nomads, hybrid employees and visitors who need a quiet place to read, think or work for a short or extended period. Its modular logic allows units to be placed individually or in rhythmic rows, adapting seamlessly to different layouts and space constraints.





Concentration Zone

Encourage focus and privacy

Divide your space with ease

Reduce visual distractions

PRODUCT INFORMATION

Versions
1- or 1,5-seat modules; left- or right-handed seat position

Table
Integrated work surface, straight or with an angled edge

Electrical outlet
Integrated in the table top

Lighting
Integrated to the wall panel

Warranty
5 years

Sustainability
Designed according to circular economy principles. All components are easily replaceable, supporting long product life and responsible use

Certification

FSC
www.fsc.org
FSC™C170945
Look out for our FSC-certified products

STANDARD MATERIALS

Walls
Laminated chipboard, partially covered without fabric upon request

Wall frame
Solid ash wood

Table
Laminated birch plywood table top with powder-coated metal frame

Seat
Durable HR foam; fire retardant HR foam on request

Seat legs
Solid ash wood

Cushions
Feather filling, attached with velcro

Fabric upholstery
Removable covers are attached with velcro
Choose any fabric from **Intuit Standard Fabric Collection**

Additional information
As part of after-sales service we offer the change of cover fabric and all other components if needed



FINISHING OPTIONS



Natural leg finish, anti-slip soles



Black leg finish, anti-slip soles

Seat legs

Solid ash, stained and lacquered

Natural	
Black	

Other finishing options available on request.

Walls

Laminated chipboard, lacquered

Natural ash	

Wall frame

Solid ash, lacquered

Natural	

Table top

Birch plywood, laminated

Natural	

Other finishing options available on request.



ELECTRICAL OUTLET



220V + USB A

Powerdot Compact 61
Color: Black Matt

Available options EU, FR, UK



220V + USB A & C

Powerdot 16
Color: Black Matt

Available options DK, EU, FR

Other electrical outlet combinations available on request.

LIGHTING



Black



White

Material: Metal
Switch On/Off
LED GU10 1x10W 230V

Other finishing options available on request.

DIMENSIONS

Seat height: 50 cm / Seat depth: 42 cm, without pillow 60 cm

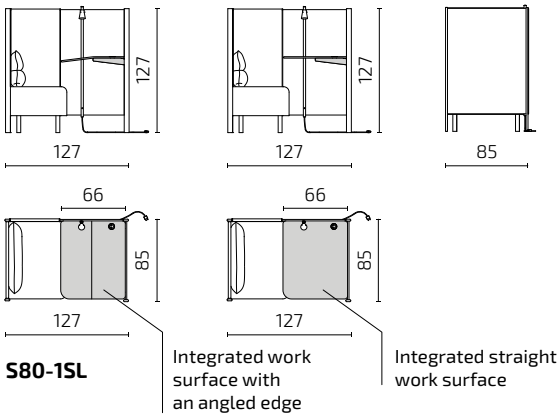

S80-1SL

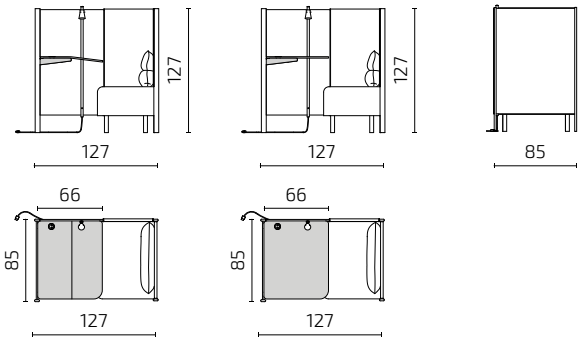

S80-1SR

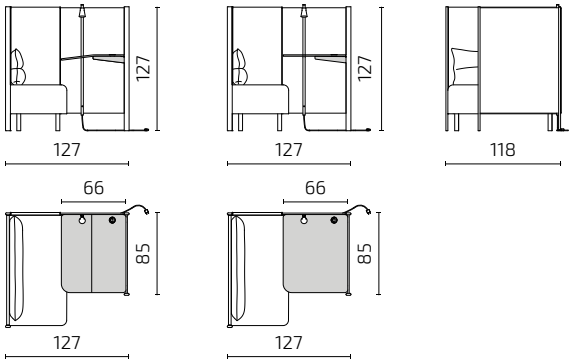

S80-1,5SL

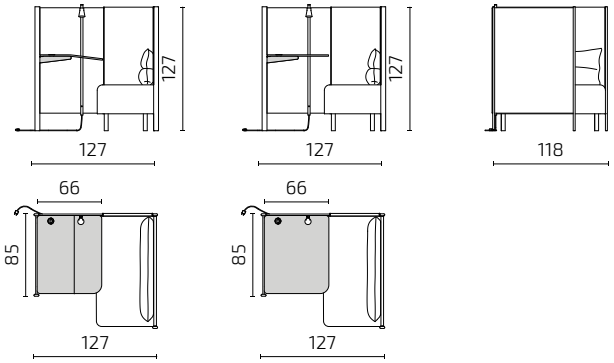

S80-1,5SR

All dimensions provided in centimetres.

Wander

Available at pCon PLANNER

Cosy niche sofa

Design: Lauri Visnapuu

When you combine the comfort of a home sofa with the convenience of an office sofa, you get Wander – a cosy niche sofa with high walls that provides visual separation, supports productivity, and can be easily moved around.

With modules available in three different widths, Wander offers a number of interior design options. By placing the modules opposite each other, the result is a cosy nest suitable for a private chat. When complemented with an auxiliary desk, it serves as a functional work island. Equipped with castors, Wander moves with you. Modules arranged in a row are also suitable, for a café, for example.

Wander's soft back cushions are loose and adjustable. In keeping with circular economy design, Wander's coverings are durable and easy to replace, even on your own.





Welcome Zone



Social Zone



Collaboration Zone



Concentration Zone

Can be moved around, if desired

Help make waiting more comfortable

Allows you to focus and separate

PRODUCT INFORMATION

Versions
Available in 3 different sizes. Additionally available as Workbays in 3 different sizes when connected with compound wall

Legs
Lockable 360° rotating castors

Accessories
Workbays' compound walls are equipped with tables to add functionality to the seating area

Electrical outlet
Intergrated electrical outlet

Warranty
5 years

Sustainability
Based on principles of the circular economy

Certification

FSC
www.fsc.org
FSC™C170945
Look out for our FSC-certified products

STANDARD MATERIALS

Frame
Solid wood and plywood

Seat and backrest
Durable HR foam; fire retardant HR foam on request

Tables
Matt high-pressure laminate top with powder-coated metal leg

Pillows
Feather filling, attached with Velcro

Fabric upholstery
The cover fabric is not removable
For extra acoustic attenuation acoustic fabrics recommended
Choose any fabric from Intuit **Standard Fabric Collection**

Additional information
As part of after-sales service we offer the change of cover fabric and all other components if needed



FINISHING OPTIONS

Tabletop

High-pressure laminate

Black

Table leg

Powder-coated metal

Jet Black RAL 9005

Other finishing options available on request.



ELECTRICAL OUTLET

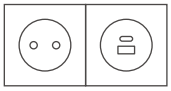

220V + USB A & C

Other electrical outlet combinations available on request.

Berker Integro Flow
Color: Anthracite Matt

Available options DK, EU, FR, UK





DIMENSIONS

Seat depth: 46 cm, without pillow 63 cm
Seat height: 46 cm

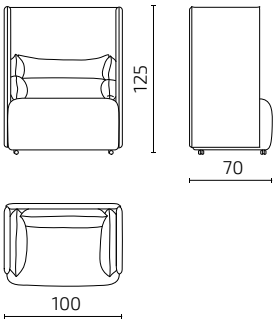

S129-S1H3

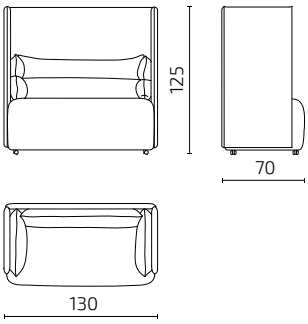

S129-S2H3

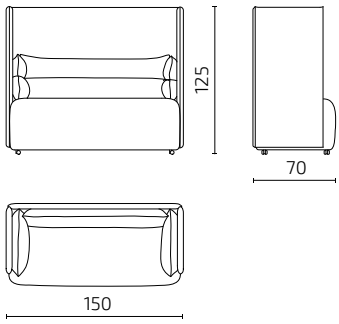

S129-S25H3

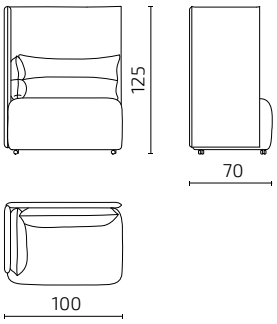

S129-1CLH3

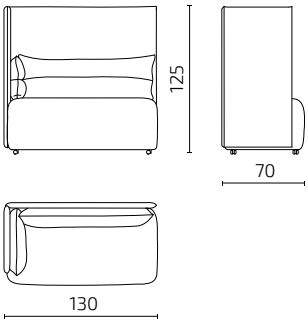

S129-2CLH3

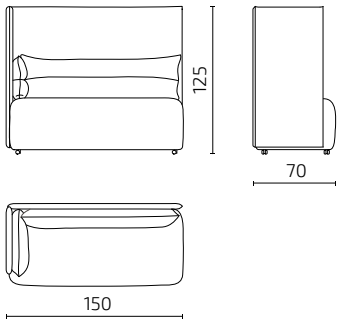

S129-25CLH3

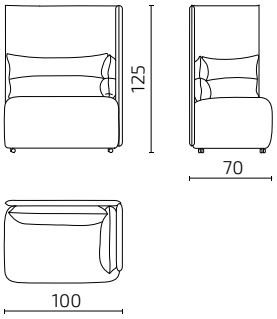

S129-1CRH3

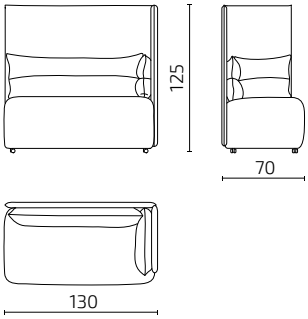

S129-2CRH3

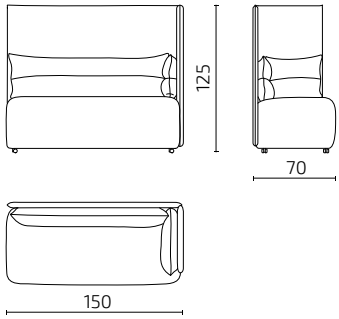

S129-25CRH3

Tables

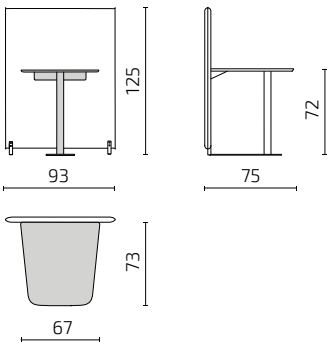

S129-WH3T1

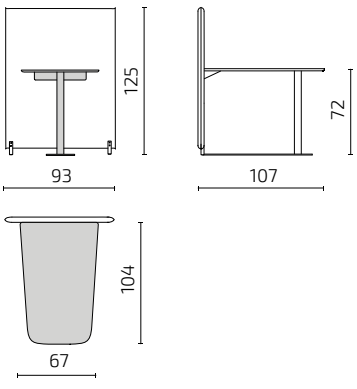

S129-WH3T2

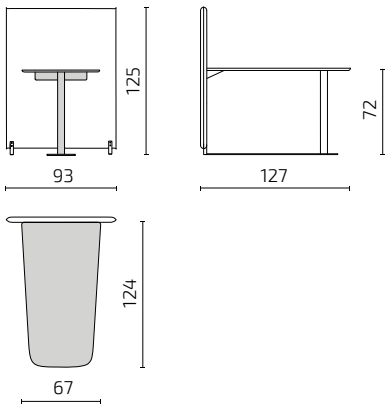

S129-WH3T25

All dimensions provided in centimetres.

Intuit Booth

Available at pCon PLANNER

Phonebooth
Design: Iseasi



You need to make a call. But you'd rather the whole office didn't listen in. Booth provides a quiet oasis, so you can focus on your conversation, without distractions.

We saw an opportunity to make the basic phone booth a much more pleasant place to be. If you've spent time in cramped and claustrophobic phone booths before, you'll marvel at how Booth opens up the space. You can be part of the open-plan space, while still having access to the focus and privacy you need at various points of your day. And its rocking and rotating seat gives you room to move, without banging your elbows on the walls every 5 seconds.

Booth harnesses technology and design to provide an intuitive space for your special task. With sound absorbing upholstery and acoustic panels, Booth dampens noise from every direction. Its motion sensor fresh air ventilation system and adjustable LED lighting help you create exactly the environment you work well in. While its wheels mean you can relocate it to anywhere in your office.



Concentration Zone

Enjoy a room that feels bigger on the inside

Find the peace you need

Take calls without disturbing your team

PRODUCT INFORMATION

Acoustics
Sound absorption class A

Movable
On four wheels underneath, floor adjusters are integrated for levelling

Integrated ventilation
Airflow rate: when occupied 40l/s; stand-by mode, after 5 mins no occupancy 27 l/s

Accessories
Bar height perch, 360° swivel and rocking

Electrical outlet
Intergrated electrical outlet

Warranty
5 years

Sustainability
Based on principles of the circular economy

Test & Certification
Sound absorption class B

FSC
www.fsc.org
FSC™C170945
Look out for our FSC-certified products

STANDARD MATERIALS

Structure
High-quality plywood, painted black

Outside
Soft upholstered panels covered with any felt fabric

Inside
Ceiling and wall panels covered with certified acoustic and fire-retardant felt and fabric

Floor
Carpet tile in a fishbone pattern

Glass door and back wall
442 laminated and tempered clear glass with sound control PVB interlayer

Bar height perch
Durable HR-foam, fabric; powder-coated matt metal legs; tilting base

Fabric upholstery
Choose any felt from **Intuit Standard felt selection**

Additional information
As part of after-sales service we offer the change of cover fabric and all other components if needed

Utilitas Wind office in Tallinn, Estonia. Photo: Märt Lillesiim



INSIDE COVER MATERIALS

Walls

Pressed felt

Dark Grey

Floor

Carpet tile

Grey

Other finishing options available on request.

ELECTRICAL OUTLET

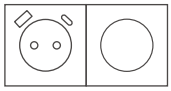

220V + USB A & C + Dimmer

Jung LS
Color: Anthracite Matt

Available options EU, FR

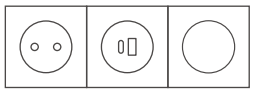

220V + USB A & C + Dimmer

Jung LS
Color: Anthracite Matt

Available options UK

Gira
Color: Anthracite Matt

Available options DK

Other electrical outlet combinations available on request.







DIMENSIONS

Phonebooth

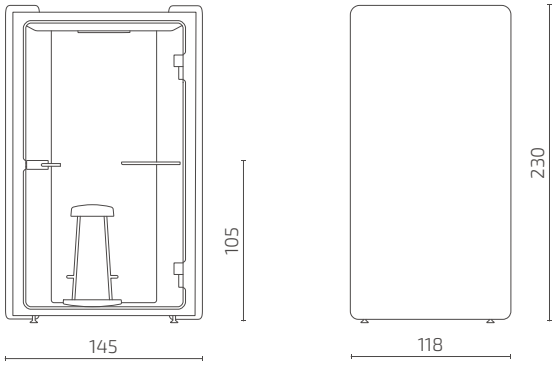

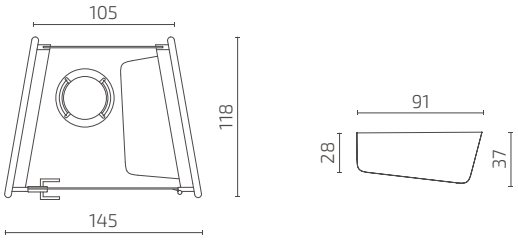

S122-BOOTH1

All dimensions provided in centimetres.

Bar height perch

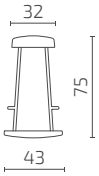

S122-BFL1

More Space

Booth's trapezoid shape is especially designed to feel spacious. It enables you to choose different positions. Its wide glass panels help you feel part of your wider surroundings, without being disturbed by them. And make the whole booth full of light. You can swing and turn on your chair, adapting your setup to whatever you need to work on.





Aide

Available at pCon PLANNER

Multifunctional table series

Design: Karl Kukk

The Aide table is an indispensable backdrop, designed to complement room layouts and core furniture. The multi-functional table series comprises variations that are tall, low, slender, sturdy, spacious, compact, and offer a combination of features, totalling 6 different versions.

With its timeless and refined appearance, Aide blends into any interior, while maintaining an understated presence, allowing other furniture pieces to take the spotlight. Aide focuses on function adapting to various environments – it can be a coffee table in the lounge area, a dining table in cafes and canteens, or a desk in the work zone. Finding the perfect solution is easy, as Aide can be integrated with the entire Intuit soft furniture range.





Welcome Zone



Social Zone



Collaboration Zone



Concentration Zone

- Easy to combine with other furniture
- Can serve several functions
- Always blends stylishly into the interior

PRODUCT INFORMATION

Versions
Availabe in 2 different heights and 3 different sizes

Warranty
5 years

Sustainability
Based on principles of the circular economy

Certification

FSC
www.fsc.org
FSC™C170945
Look out for our FSC-certified products

STANDARD MATERIALS

Tabletop
Matt high-pressure laminate

Legs
Powder-coated metal



FINISHING OPTIONS

Tabletop

High-pressure laminate

Alpine White Egger W1100 PM	
Soft Black Egger U999 PM	
Stone Green Egger U665 PM	
Garnet Red Egger U399 PM	

Legs

Powder-coated metal

Signal White RAL 9003	
Jet Black RAL 9005	
Tarpaulin Grey RAL 7010	
Black Red RAL 3007	

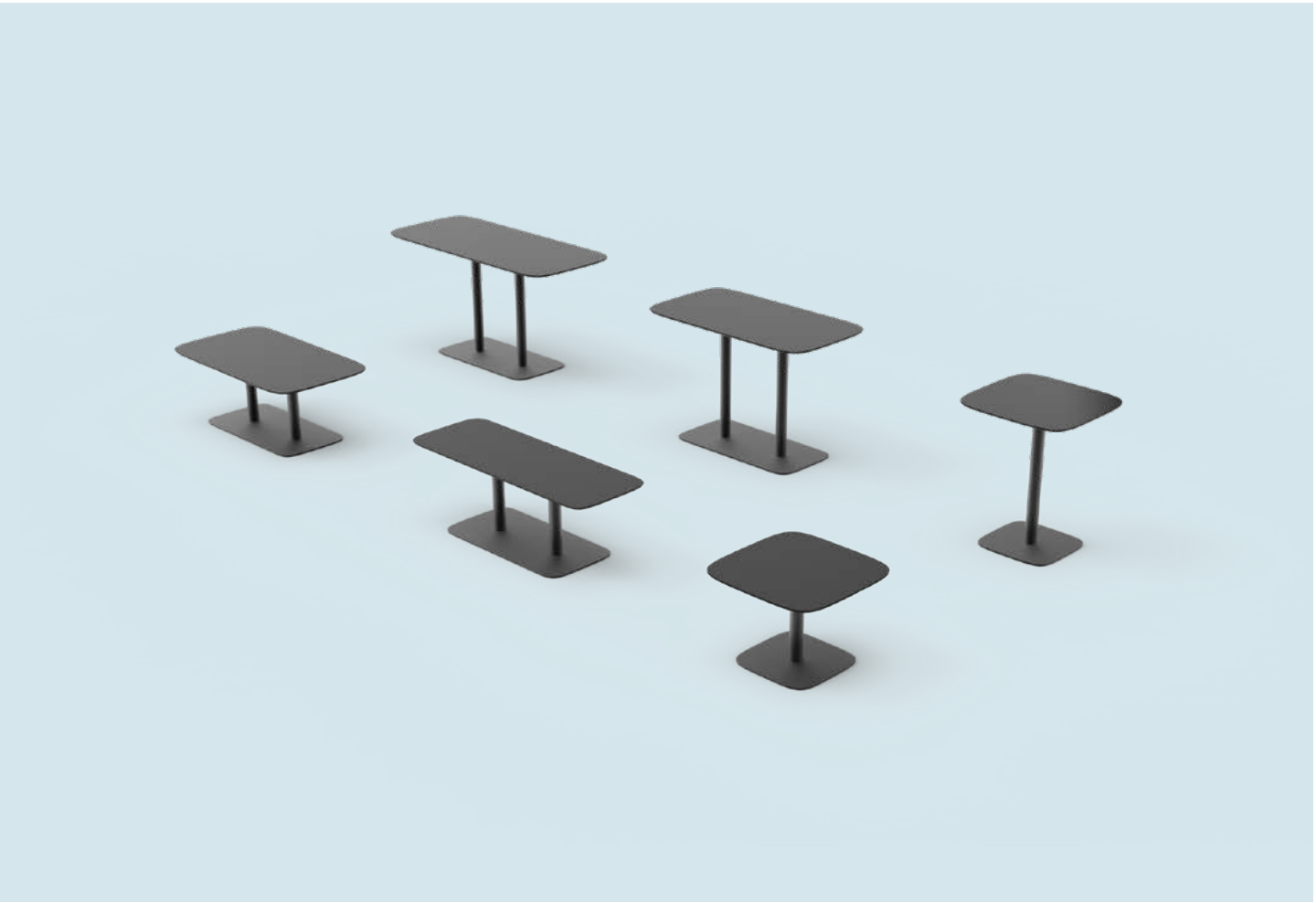

DIMENSIONS

Cafeteria or work tables

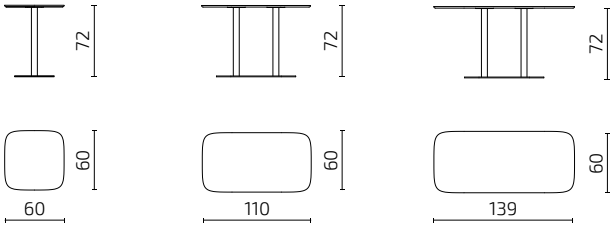

S128-T4M **S128-T1M** **S128-T3M**

Sofa tables

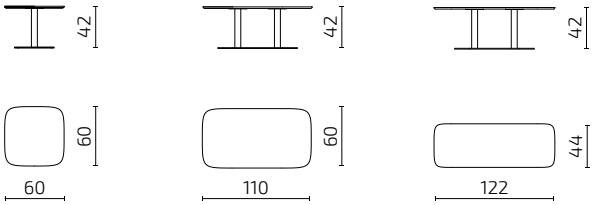

S128-T4S **S128-T1S** **S128-T3S**

All dimensions provided in centimetres.



Alfred

Available at pCon PLANNER

Side table

Design: Argo Tamm

Make it easy for your visitors by giving them somewhere to pop their coffee or the piles of notes resting on their lap.

Add its subtle and stylish design to the smaller Social areas you've dotted around the office, and your team can put down their drinks and connect with a quick midday chat.







Welcome Zone



Social Zone



Collaboration Zone

Break up a row of sofas

Make your spaces inviting and practical

PRODUCT INFORMATION

Versions
Available in 2 different heights

Warranty
5 years

Sustainability
Based on principles of the circular economy

Certification

FSC
www.fsc.org
FSC™C170945
Look out for our FSC-certified products

STANDARD MATERIALS

Tabletop and leg
Solid wood oak

Base
Powder-coated metal

FINISHING OPTIONS

Tabletop and leg

Solid oak

Whitened	
Natural	
Wenge	
Black	

Base

Powder-coated metal

Umbra Grey RAL 7022	
Jet Black RAL 9005	

Other finishing options available on request.



DIMENSIONS

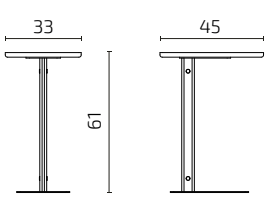

S61-T61T

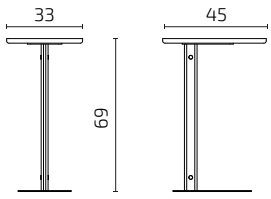

S61-T69T

All dimensions provided in centimetres.

Kuubik

Available at pCon PLANNER

Sofa table

Design: Argo Tamm

Make it easy. Kuubik is no ordinary table. It's modern cube design means it doesn't impose on its environment.

Use Kuubik to divide up the seating in your reception area, or place them around the office paired with our compact Intro armchair.





Welcome Zone



Social Zone

Bring a little interest to your reception

Encourage inspiring coffee breaks

PRODUCT INFORMATION

Versions
Available in 3 different sizes

Warranty
5 years

Sustainability
Based on principles of the circular economy

STANDARD MATERIALS

Tabletop
Mass-colored wood fibreboard / Veneered MDF board

Frame
Powder-coated metal

Postimees office in Tallinn, Estonia



FINISHING OPTIONS

Tabletop

Veneered MDF board

Natural oak

Mass-colored wood fibreboard

Black

Frame

Powder-coated metal

Jet Black RAL 9005

Other finishing options available on request.







DIMENSIONS

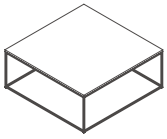



S56-TLK

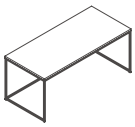

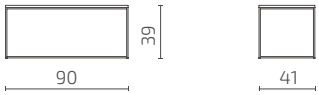

S56-TMA

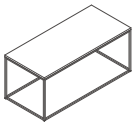

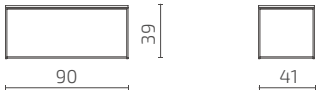

S56-TMK





S56-TSA





S56-TSK

All dimensions provided in centimetres.



Kuubik

Available at pCon PLANNER

Side table

Design: Intuit design team

Kuubik side table is a small table of just the right height and weight to pull over your lap while working with the laptop on the couch. The side table is also a comfortable place next to the sofa to place a cup of coffee or a notebook.

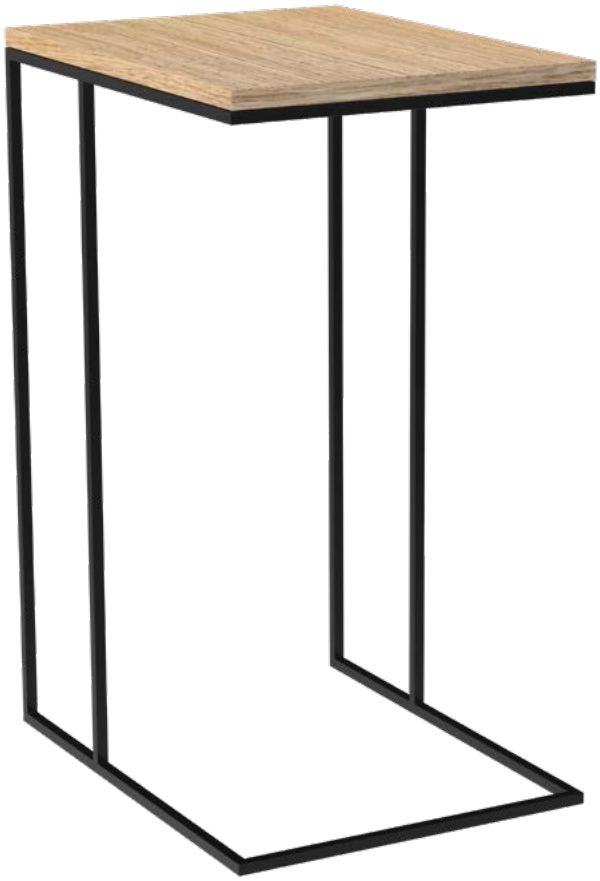



Welcome Zone



Social Zone



Concentration Zone

Give a practical addition to the sofa

Add comfort when working with a laptop on the couch

PRODUCT INFORMATION

Versions
Available in 3 different sizes

Warranty
5 years

Sustainability
Based on principles of the circular economy

STANDARD MATERIALS

Tabletop
Mass-colored wood fibreboard / Veneered MDF board

Frame
Powder-coated metal

FINISHING OPTIONS

Tabletop

Veneered MDF board

Natural oak

Mass-colored wood fibreboard

Black

Frame

Powder-coated metal

Jet Black RAL 9005

Other finishing options available on request.





DIMENSIONS

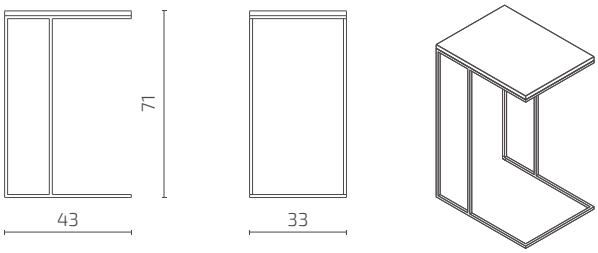

S56-TAB1

All dimensions provided in centimetres.

Grow

Available at pCon PLANNER

Mobile plant divider

Design: Lauri Visnapuu

Transform the office into a lush forest and show your commitment to employee well-being. Grow's flowerpots of three different heights act as smart space dividers, offering a secluded retreat from the endlessness of the open office floor plan. Equipped with 360-degree rotating wheels, these planters allow you to refresh the office landscape with a new floral arrangement at your whim.

For added versatility, Grow absorbs office noise and fosters a tranquil environment for the team. Alternatively, choose a multifunctional design featuring a spacious shelf on one side, blending utility with natural beauty.









Welcome Zone



Social Zone



Collaboration Zone



Concentration Zone

Construct inspiring private spaces

Improve office acoustics

Bring greenery into the office

PRODUCT INFORMATION

Versions
Available in 3 different heights

Acoustics
Sound absorption class D

Legs
360° rotating and lockable castors

Warranty
5 years

Sustainability
Based on principles of the circular economy

Test & Certification
Acoustic absorption test - Class D

FSC
www.fsc.org
FSC™C170945
Look out for our FSC-certified products

STANDARD MATERIALS

Walls
Veneered MDF board, covered with fabric from one or both sides upon request

Shelving (on models with shelves)
Veneered MDF board

Legs
Powder-coated metal

Plant box
Powder coated waterproof steel

Fabric upholstery
Choose any fabric from **Intuit Standard Fabric Collection**

Additional information
As part of after-sales service we offer the change of cover fabric and all other components if needed

Swedbank Eesti in Tallinn, Estonia. Photo: Helis Mahmastol



The top part of Grow features
an integrated waterproof metal box for safe watering of plants.







FINISHING OPTIONS

Shelving and walls

Veneered MDF board

Natural oak

Legs

Powder-coated metal

Jet Black RAL 9005

Other finishing options available on request.

DIMENSIONS

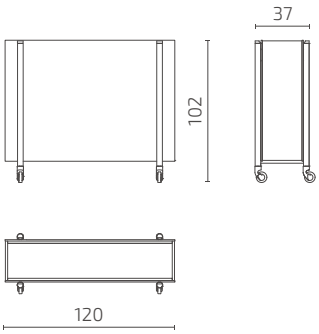

S123-RJH2

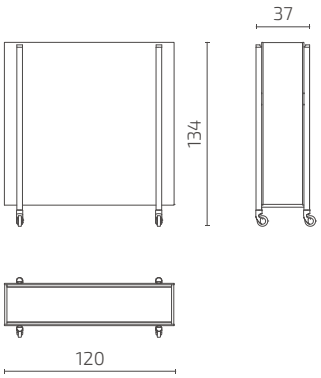

S123-RJH3

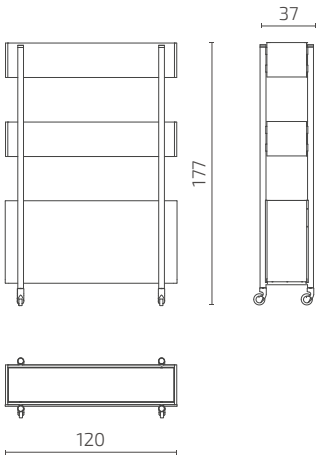

S123-RJH4

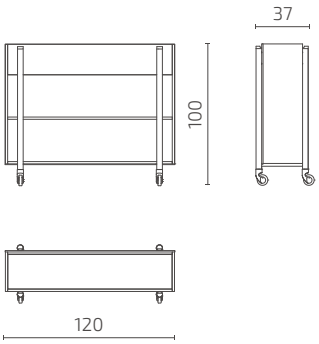

S123-RJRH2

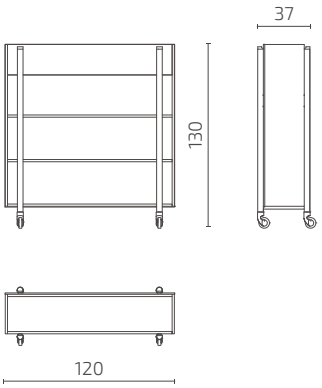

S123-RJRH3

All dimensions provided in centimetres.



Hover

Available at pCon PLANNER

Leaning wall

Design: Karl Kukk

Sometimes, there's not enough space for a comfortable sofa, but you still want to make waiting comfortable. The day is saved by the soft leaning wall Hover, which you can lean on to pass the time alone or chatting with a companion.

Hover is brilliantly space-saving and fits perfectly in places where you might need to stand, such as at the airport, in a corridor, or behind a meeting room door. Placed in the office kitchen or in an in-between space, it provides a convenient spot for exchanging ideas with a colleague on the go. Hover is available as a module in four different sizes. By adding a coffee table and a power socket, you can even get work done while leaning. Quickly installable and featuring easily replaceable fabric, Hover also offers noise-dampening properties thanks to its foam and perforated inner panel. Hover is designed for disassembly fully embracing the principles of circular design.

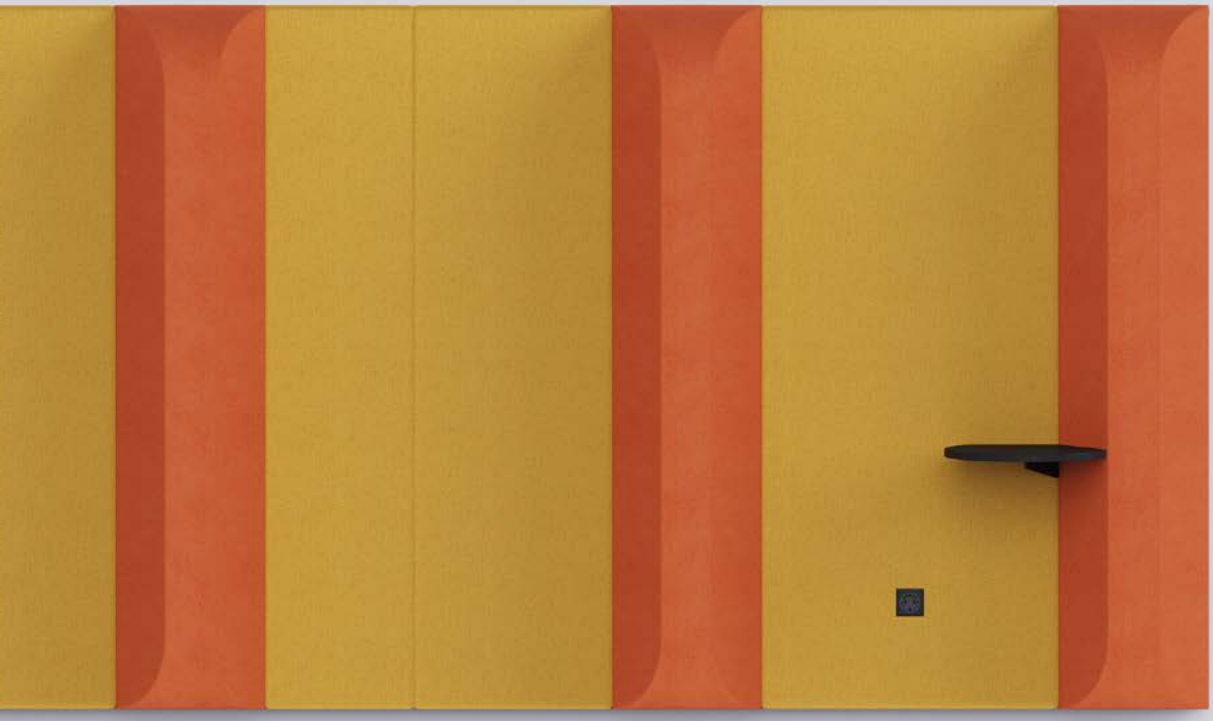



Welcome Zone



Social Zone

- Enable to have quick conversations
- Save space, adding cosiness to the milieu
- Help make waiting more comfortable

PRODUCT INFORMATION

Versions
Available in 4 different modules

Acoustics
Sound absorption class B

Accessories
Tables to add functionality to the standing area

Electrical outlet
Intergrated electrical outlet

Warranty
5 years

Sustainability
Embraces the principles of circular design

Test & Certification
Acoustic absorption test - Class B

FSC
www.fsc.org
FSC™C170945
Look out for our
FSC-certified products

STANDARD MATERIALS

Frame
Solid wood slats, perforated MDF-plate

Mounting
Metal profiles, button-fix

Backrest
Durable HR foam; fire retardant HR foam on request

Tables
Mass-colored wood fibreboard top

Fabric upholstery
The cover fabric is removable
Choose any fabric from **Intuit Standard Fabric Collection**

Additional information
As part of after-sales service we offer the change of cover fabric and all other components if needed





CIRCULAR DESIGN

Designed for disassembly fully embracing **the principles of circular design.**

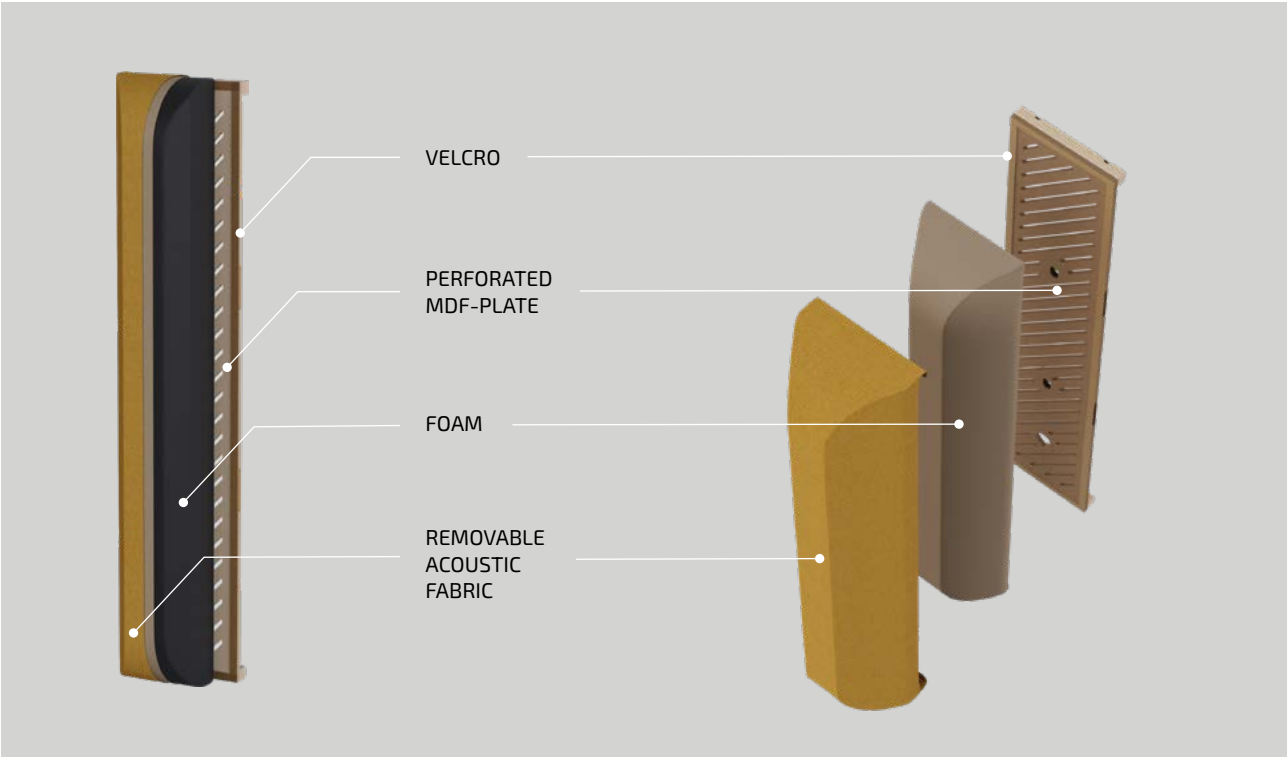

FINISHING OPTIONS

Table

Mass-colored wood fibreboard

Grey	
Black	

Other finishing options available on request.



ELECTRICAL OUTLET

220V

Berker Integro Flow
Color: Anthracite Matt

Available options DK, EU, FR, UK

USB A & C

Berker Integro Flow
Color: Anthracite Matt

Available options DK, EU, FR, UK

Other electrical outlet combinations available on request.

DIMENSIONS

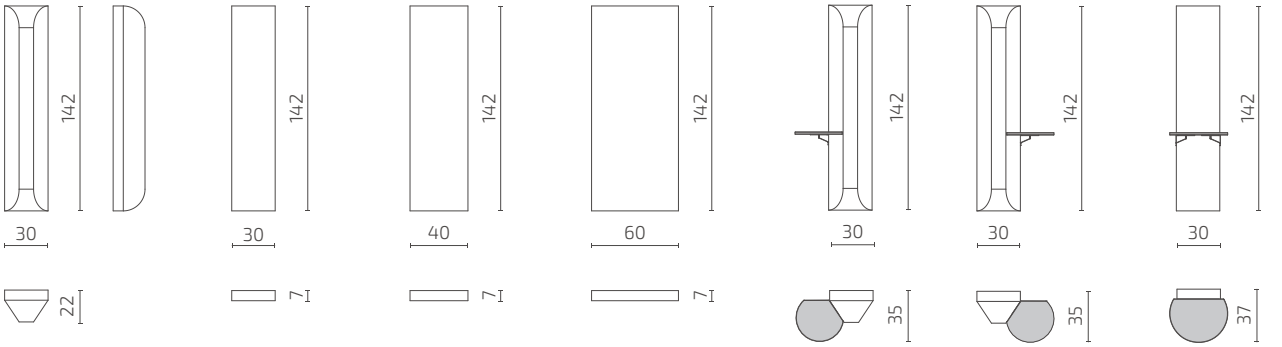

S130-M1 **S130-M2** **S130-M3** **S130-M4** **S130-T1L** (only table) **S130-T1R** (only table) **S130-T2** (only table)

All dimensions provided in centimetres.

SAMPLE COMBINATIONS











Note

Available at pCon PLANNER

Mobile whiteboard

Design: Lauri Visnapuu

Make room for big ideas. Use our convenient mobile whiteboard to utilise every brainstorming opportunity. Equipped with 360-degree wheels, you can take the whiteboard wherever fresh ideas are born.

The back of the whiteboard is optionally covered with cutting-edge acoustic felt. Given its sound-absorbing qualities and notable height, the board can be transformed into a privacy screen, showcasing our love for multifunctional furniture.







Collaboration Zone



Concentration Zone

Minimize workplace noise

Divide your office on the go

Wheel the board around for creative collaboration

PRODUCT INFORMATION

Warranty
5 years

Legs
360° rotating and lockable castors

Sustainability
Based on principles of the circular economy

Certification

FSC
www.fsc.org
FSC® C170945
Look out for our FSC-certified products

STANDARD MATERIALS

Whiteboard
High-pressure decorative laminate

Panel
MDF, upholstered with batting and covered with acoustic felt on request

Legs
Powder-coated metal

Marker Holder
Varnished solid oak

Fabric upholstery
The cover fabric is not removable
Choose any fabric from **Intuit Standard Fabric Collection**

Additional information
As part of after-sales service we offer the change of cover fabric and all other components if needed

FINISHING OPTIONS

Legs

Powder-coated metal

Jet Black RAL 9005

Other finishing options available on request.



DIMENSIONS

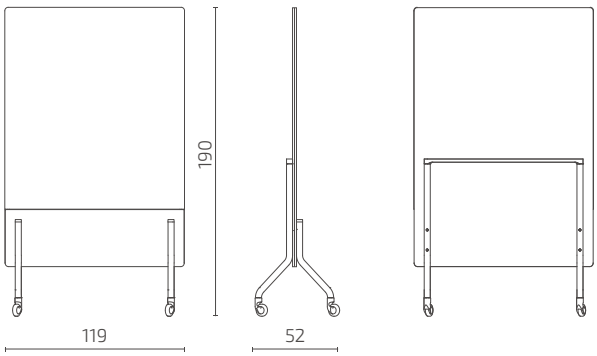

S124-MWH190

All dimensions provided in centimetres.



Silent Note

Available at pCon PLANNER

Mobile room divider

Design: Lauri Visnapuu

Shape your world the way you want it. Use this mobile room divider to create a separate space in an open office exactly where you need it. Equipped with 360-degree rotating wheels, it moves easily to the work rhythm of your team.

Silent Note belongs to the Note product family and comes covered with fabric on both sides, offering unlimited possibilities for its unique design. To increase the sound absorbing properties, we recommend using an acoustic felt as a cover.







Collaboration Zone



Concentration Zone

Minimize workplace noise

Divide your office on the go

Wheel the room divider around for creative collaboration

PRODUCT INFORMATION

Warranty
5 years

Legs
360° rotating and lockable castors

Sustainability
Based on principles of the circular economy

Certification

FSC
www.fsc.org
FSC® C170945
Look out for our FSC-certified products

STANDARD MATERIALS

Panel
MDF, upholstered with batting and covered with acoustic felt on request

Legs
Powder-coated metal

Fabric upholstery
The cover fabric is not removable
Choose any fabric from **Intuit Standard Fabric Collection**

Additional information
As part of after-sales service we offer the change of cover fabric and all other components if needed

FINISHING OPTIONS

Legs

Powder-coated metal

Jet Black RAL 9005

Other finishing options available on request.



DIMENSIONS

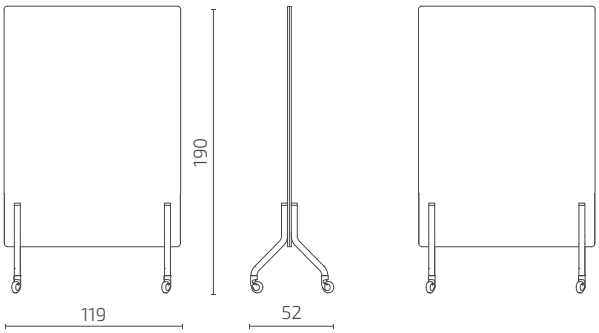

S124-WH190

All dimensions provided in centimetres.

Oaas

Available at pCon PLANNER

Planter room divider

Design: Lauri Visnapuu

Character lies in the details. The small, seemingly insignificant elements that give a space its unique identity. The best details don't just enhance aesthetics – they add value!

The Oaas decorative room divider is a stylish and functional backdrop that brightens any room, regardless of size. Its elegant round modules can stand alone or be connected to form 'walls', creating purposeful zones within a space. Designed with practicality in mind, Oaas features a surface perfect for displaying plants or decorative objects. Plus, its fabric-covered outer wall improves acoustics by absorbing echoes.





Welcome Zone



Social Zone



Collaboration Zone



Concentration Zone

Allow the room to be divided into zones

Reduce noise and echoes

Add variety to the room

PRODUCT INFORMATION

Versions
Available as a surface or plant pedestal modules in 7 different heights

Modularity
Modules can be connected together

Warranty
5 years

Sustainability
Based on principles of circular economy

Certification

FSC
www.fsc.org
FSC™C170945
Look out for our FSC-certified products

STANDARD MATERIALS

Frame
MDF, carton

Sole
Felt sole

Surfaces
Mass-colored wood fibreboard top

Inside plant pedestals
Water and dirt retardant vinyl fabric, recycled from our production leftovers

Fabric upholstery
The cover fabric is removable
Choose any felt from **Intuit felt selection**

Additional information
As part of after-sales service we offer the change of cover fabric and all other components if needed



FINISHING OPTIONS



Surface

Mass-colored wood fibreboard

Black

Other finishing options available on request.



SAMPLE COMBINATIONS

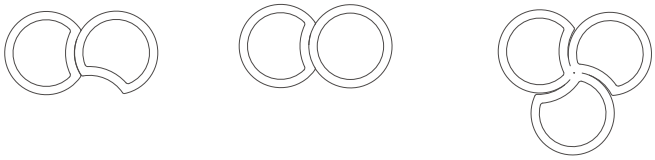

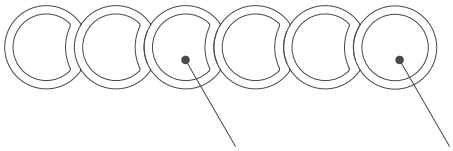

LINKABLE
PLANTER MODULE

END CAP
PLANTER MODULE

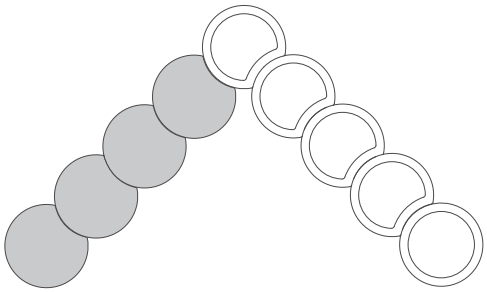

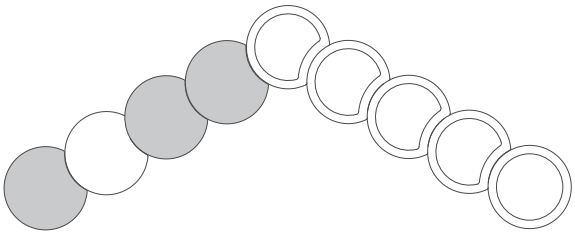

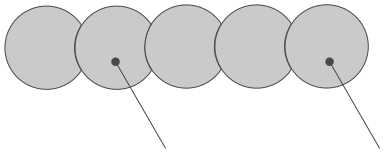

LINKABLE
SURFACE MODULE

END CAP
SURFACE MODULE

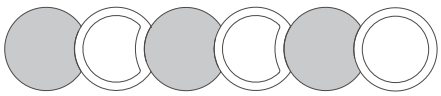

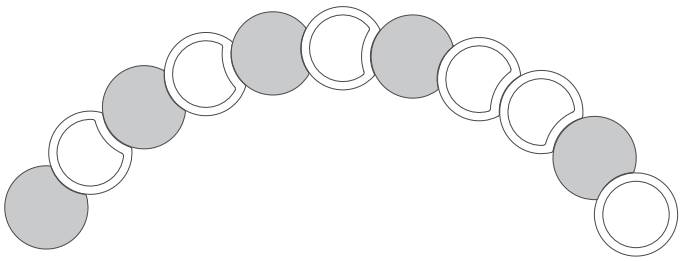







DIMENSIONS

Linkable surface module

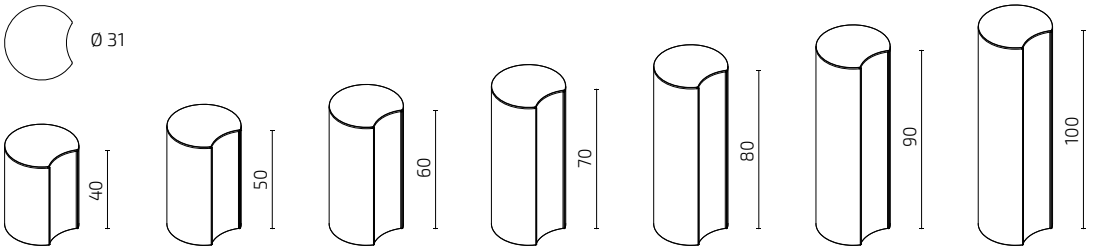

S131-JSH40 **S131-JSH50** **S131-JSH60** **S131-JSH70** **S131-JSH80** **S131-JSH90** **S131-JSH100**

Linkable planter module

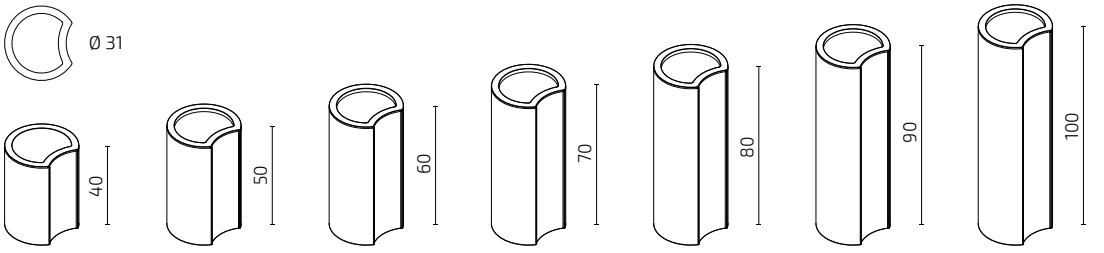

S131-JPH40 **S131-JPH50** **S131-JPH60** **S131-JPH70** **S131-JPH80** **S131-JPH90** **S131-JPH100**

End cap surface module

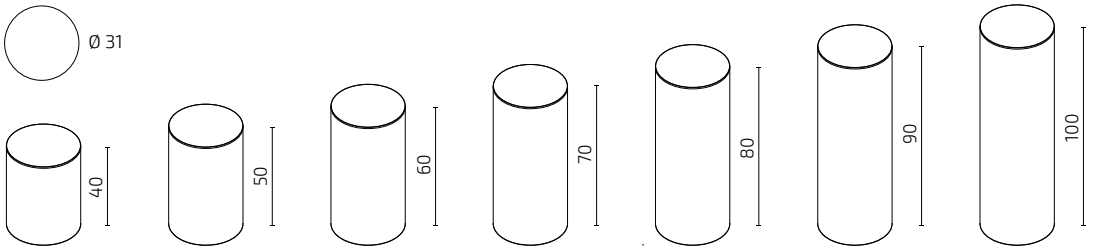

S131-OSH40 **S131-OSH50** **S131-OSH60** **S131-OSH70** **S131-OSH80** **S131-OSH90** **S131-OSH100**

End cap planter module

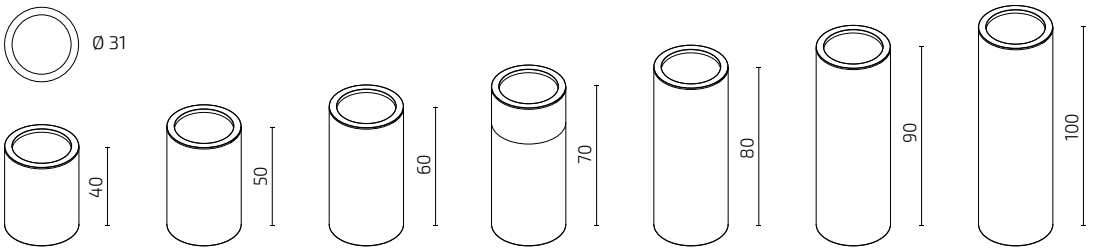

S131-OPH40 **S131-OPH50** **S131-OPH60** **S131-OPH70** **S131-OPH80** **S131-OPH90** **S131-OPH100**

All dimensions provided in centimetres.

Planter box inner dimensions

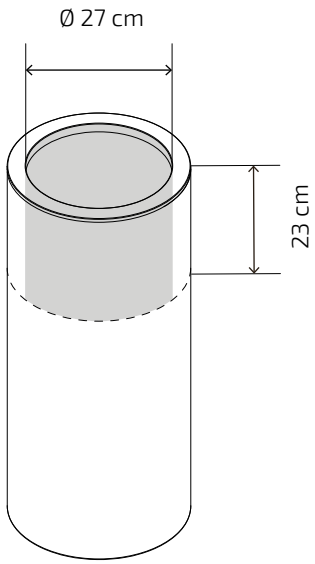





Sigmund

Available at pCon PLANNER

Sound-absorbing screen

Design: Pent Talvet, Iseasi

The office of the future is agile and flexible. When you need to change the use of a space without knocking down walls, then you need Sigmund. This ingenious sound-absorbing screen can make any area feel like a private office.

Create a smaller Collaboration Zone within an open-plan space, or curate an enclosed seating area. Wherever the flow of your workplace, Sigmund can help you intuitively meet the needs of your team. Without having to don a hard hat.





Social Zone



Collaboration Zone



Concentration Zone

Easily display information

Deal with background noise

Create a quiet corner

Divide your open space

PRODUCT INFORMATION

Warranty
5 years

Legs
360° rotating wheels

Sustainability
Based on principles of the circular economy

Certification

FSC
www.fsc.org
FSC™C170945
Look out for our FSC-certified products

STANDARD MATERIALS

Filling
Synthetic felt with sound-absorbing qualities; cotton batting; HR-foam

Fabric upholstery
The cover fabric is not removable
Choose any fabric from **Intuit Standard Fabric Collection**

Additional information
As part of after-sales service we offer the change of cover fabric and all other components if needed

DIMENSIONS

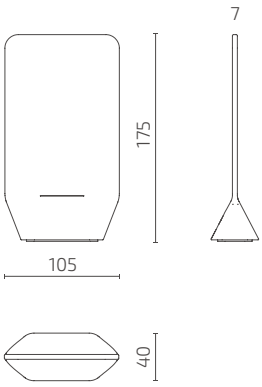

S104-WH175

All dimensions provided in centimetres.



Sprout

Available at pCon PLANNER

Mobile plant divider

Design: Lauri Visnapuu

Adding greenery to a space enhances overall wellbeing and helps boost productivity. Use the practical Sprout space divider, which lets you grow suitable plants right inside it.

Sprout is ideal for making any space more visually appealing and cosy. Use it to define work areas or leave it in communal spaces for flexible use – Sprout's wheels make it easy to move it around. Sprout is precisely sized to fit between two opposite-facing desks, covering the full span of both workstations and providing privacy. It comes in two heights with three different top surfaces. The fabric-covered exterior adds character and improves room acoustics.





Welcome Zone



Social Zone



Collaboration Zone



Concentration Zone

- Easy to move and reposition as needed
- Divide the room into zones
- Add greenery, cosiness, and a sense of privacy

PRODUCT INFORMATION

Versions
Available with 3 different surface widths and
in 2 different heights

Legs
360° rotating and lockable castors

Warranty
5 years

Sustainability
Based on principles of circular economy

Certification

FSC
www.fsc.org
FSC™C170945
Look out for our
FSC-certified products

STANDARD MATERIALS

Frame
Sheet metal, plywood

Surfaces
Mass-colored wood fibreboard top

Planter box
Powder coated sheet metal, not waterproof

Fabric upholstery
Choose any felt from **Intuit felt selection**

Additional information
As part of after-sales service we offer the change of cover fabric and all other components if needed



FINISHING OPTIONS

Surface

Mass-colored wood fibreboard

Black

Other finishing options available on request.



DIFFERENT SURFACES

NARROW SURFACE

The most compact option. With minimal surface space around the planting area, this version is perfect for use in narrow corridors and passageways.

EXTENDED SURFACE

The medium-width surface surrounding the planting area is complemented by an extra surface. It can be used for seating or storing work equipment. Suitable for both open areas and between desks.

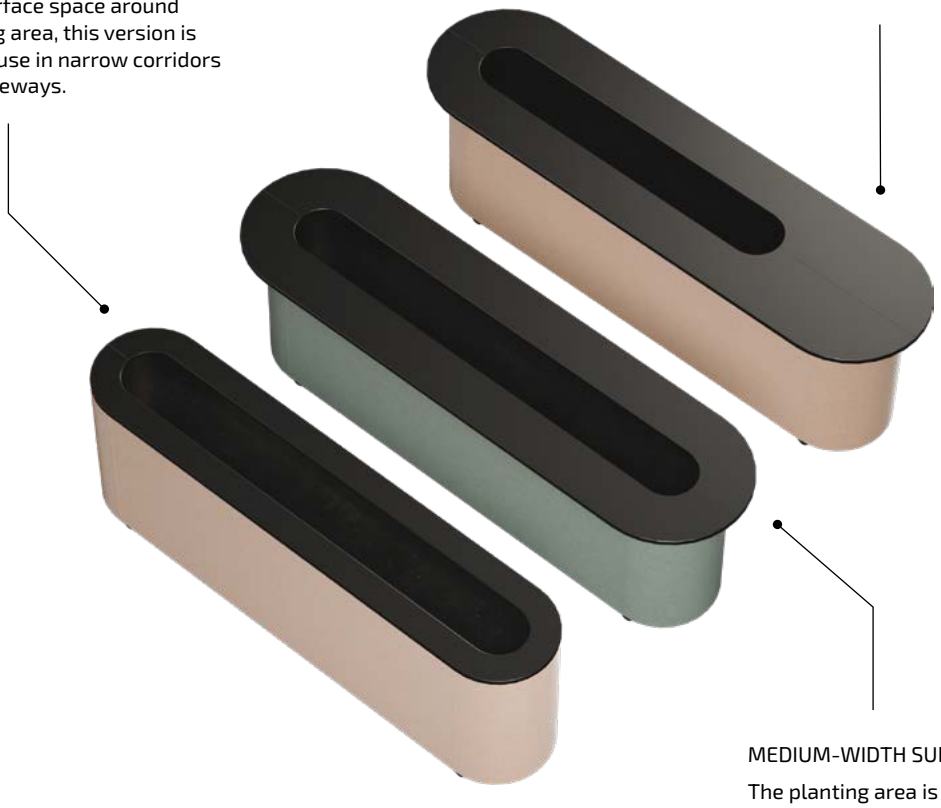

MEDIUM-WIDTH SURFACE

The planting area is bordered by a medium-width surface – ideal for resting small items like a coffee cup. Suitable for placement in the centre of a room, where it creates visual separation.

DIMENSIONS

Narrow surface

Planter box inner dimensions
Width: 150 cm / Depth: 31 cm / Height: 22 cm

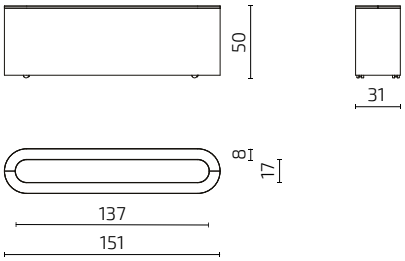

S78-V1H1

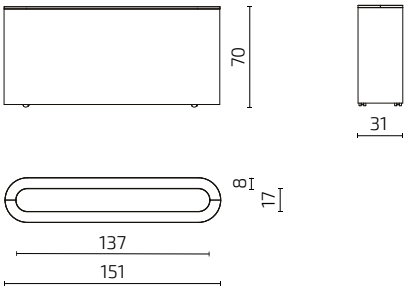

S78-V1H2

Medium-width surface

Planter box inner dimensions
Width: 150 cm / Depth: 31 cm / Height: 22 cm

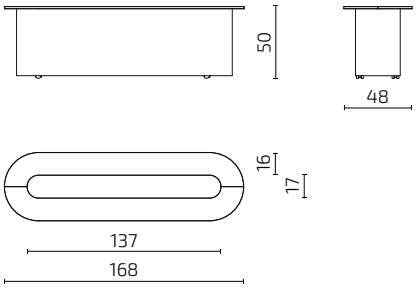

S78-V2H1

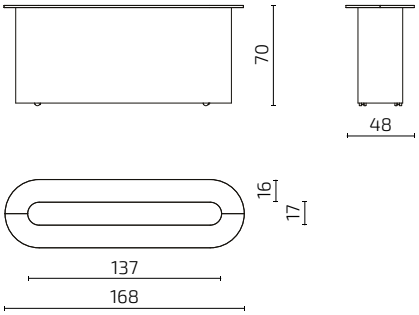

S78-V2H2

Extended surface

Planter box inner dimensions
Width: 150 cm / Depth: 31 cm / Height: 22 cm

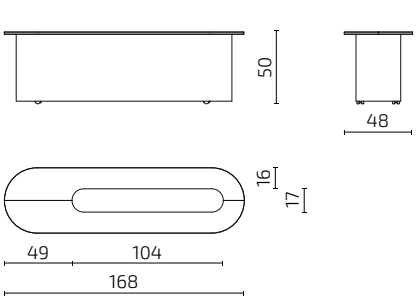

S78-V3H1

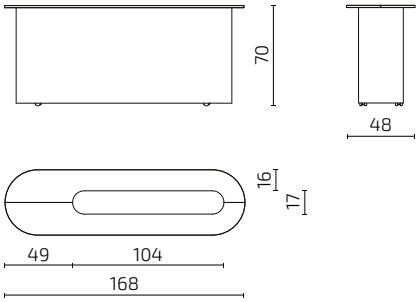

S78-V3H2

All dimensions provided in centimetres.

STANDARD FABRIC COLLECTION: A SYMPHONY OF DESIGN, DURABILITY AND SUSTAINABILITY

At Intuit by Softrend, we understand that the right fabric can transform a piece of furniture from merely functional to truly exceptional. That's why we offer an extensive Standard Fabric Collection, featuring over 1,000 high-quality fabrics sourced from renowned international suppliers including Camira, Kvadrat, Gabriel, and others. Each fabric is carefully selected to ensure it meets the rigorous demands of public spaces, with superior durability and compliance with flame and/or fire resistance standards.

Our collection is meticulously curated to cater to diverse tastes and budgets, organized into five distinct price categories. This structured assortment ensures that whether you're seeking luxury or affordability, you'll find fabrics that do not compromise on quality or style.

For those who desire a personal touch, we offer the flexibility to upholster your chosen furniture with your own material, allowing for a truly customized interior experience.

We are committed to sustainability; the majority of our fabrics bear the Oeko-Tex or Ecolabel certifications and/or are made from recycled materials, reflecting our dedication to environmental responsibility. Our annual update of the fabric selection not only aligns with the latest trends but also retains beloved classics that have stood the test of time.

Discover fabrics ranging from rich wools and sleek artificial leathers to soft felts, most backed by a 10-year manufacturer's warranty. The Intuit by Softrend Standard Fabric Collection is designed not just to meet, but to exceed the functional and aesthetic needs of any space.







STANDARD FABRICS SELECTION 2026

PRICE CATEGORY 1

Brand	Design	Martindale	Composition	Flammability standard				Sustainability	Other
				EN 1021 1 & 2	BS 5852 Part 1 0 & 1	BS 5852 Part 2 5 Crib	IMO		
Camira	Era CSE 01, 02, 21, 25, 31, 32, 34, 39, 41, 42	100 000	100% polyester	X		X		OEKO TEX®	10 YEAR
Davis	Cloud	90 000	100% polyester	Part 1 only	X			OEKO TEX®	
Davis	Storm	100 000	100% polyester	Part 1 only	X			OEKO TEX®	
Nevotex	Lido/Lido Trend	115 000	100% polyester	Part 1 only	X			OEKO TEX®	
Textum	Lotos	100 000	80% PES 20% CO base fabric 100% PU surface		X				

Recycled fabric · Easy-clean fabric · Faux leather · Acoustic fabric · 10 year guarantee

Water repellent · Easy-water cleaning

PRICE CATEGORY 2

Brand	Design	Martindale	Composition	Flammability standard				Sustainability	Other
				EN 1021 1 & 2	BS 5852 Part 1 0 & 1	BS 5852 Part 2 5 Crib	IMO		
AquaClean	Daytona	200 000	51% polyester 38% acrylic 11% polyamide	X	X			OEKO TEX®	aqua clean TECHNOLOGY
Blue Company	Dama	> 60 000	70% wool 20% polyester 5% polyamide 5% acrylic (recycled wool)	X	X	X			
Camira	Era*	100 000	100% polyester	X		X		OEKO TEX®	10 YEAR
Camira	Vita	100 000	Surface: 98% PVC 2% PU Substrate: 100% cotton	X		X	On request		
Camira	RePlay	100 000	100% post-consumer recycled polyester	X		X		EU Ecolabel, OEKO TEX®	10 YEAR
Camira	X2	100 000	100% recycled polyester	X		X		EU Ecolabel, OEKO TEX®	10 YEAR
Fabraa	Facet	100 000	70% recycled wool 25% polyamide 5% blended fibre	X	X				
Fabraa	Forward	100 000	50% recycled wool 30% linen 20% recycled polyamide	X	X				
Gabriel	Cura	100 000	98% post-consumer recycled polyester 2% polyester	X	X			EU Ecolabel, OEKO TEX®	10 YEAR
Kvadrat	Autumn	50 000	100% recycled polyester	X	X	X		EU Ecolabel	10 YEAR
Kvadrat	Guest	100 000	100% recycled polyester	X	X	X		EU Ecolabel	10 YEAR
Nevotex	Wooly	150 000	70% recycled wool 25% polyamide 5% blended fibre	X	X				

* Exept the fabric tones listed in Price category 1

PRICE CATEGORY 3

Brand	Design	Martindale	Composition	Flammability standard				Sustainability	Other
				EN 1021 1 & 2	BS 5852 Part 1 0 & 1	BS 5852 Part 2 5 Crib	IMO		
Camira	Main Line Flax	50 000	70% virgin wool 30% flax	X		X	On request	EU Ecolabel	10 YEAR
Camira	Main Line Twist	50 000	75% virgin wool 30% flax	X		X		EU Ecolabel	10 YEAR
Camira	Oceanic	100 000	100% post-consumer recycled polyester excl. 50% SEAQUAL® YARN	X		X		EU Ecolabel, OEKO TEX®	10 YEAR
Camira	Sumi	200 000	90% wool 10% polyamide	X		X	On request	EU Ecolabel	10 YEAR
Camira	Synergy	100 000	95% virgin wool 10% polyamide	X		X	On request	EU Ecolabel	10 YEAR
Gabriel	Step Melange	100 000	100% Trevira CS	X	X	X		EU Ecolabel, OEKO TEX®	10 YEAR
Kvadrat	Remix 3	100 000	90% new wool worsted 10% nylon		X	X		EU Ecolabel	10 YEAR
Spradling	Silvertex	300 000	100% vinyl topcoat 100% polyester backing	X					

Recycled fabric Easy-clean fabric Faux leather Acoustic fabric 10 YEAR 10 year guarantee

Water repellent Easy-water cleaning

PRICE CATEGORY 4

Brand	Design	Martindale	Composition	Flammability standard				Sustainability	Other
				EN 1021 1 & 2	BS 5852 Part 1 0 & 1	BS 5852 Part 2 5 Crib	IMO		
Camira	Blazer	45 000	100% virgin wool	X		X	On request	Ecolabel	10 YEAR
Camira	Kyoto	200 000	90% wool 10% polyamide	X		X	On request	Ecolabel	10 YEAR
Camira	Yoredale	50 000	95% wool 3% polyester 2% polyamide	X		X	On request		10 YEAR
Gabriel	Fame	200 000	95% New Zealand wool 5% polyamide	X		X		Ecolabel, OEKO TEX	10 YEAR
Kvadrat	Re-wool 2	100 000	45% recycled wook 45% new wool 10% nylon	X	X	X		Ecolabel	10 YEAR

PRICE CATEGORY 5

Brand	Design	Martindale	Composition	Flammability standard				Sustainability	Other
				EN 1021 1 & 2	BS 5852 Part 1 0 & 1	BS 5852 Part 2 5 Crib	IMO		
Kvadrat	Canvas 2	100 000	90% new wool worsted 10% nylon	X	X	X		Ecolabel	10 YEAR
Kvadrat	Steelcut Trio 3	100 000	90% new wool 10% nylon	X	X			Ecolabel	10 YEAR

intuit
BY SOFTREND

Are You Intuit?

intuitoffice.com
intuit_office
Intuit by Softrend
Intuit by Softrend

Browse the Collection